SKILLING - HELLE - CHRISTIANSEN - ROBERTSON Structural & Civil Engineers

PROJECT THE WORLD TRADE CENTER | TITLE CONNECTION DETAIL 472 H, I, J, K, L | DATE 5-7-68

REVISIONS

7-17-68

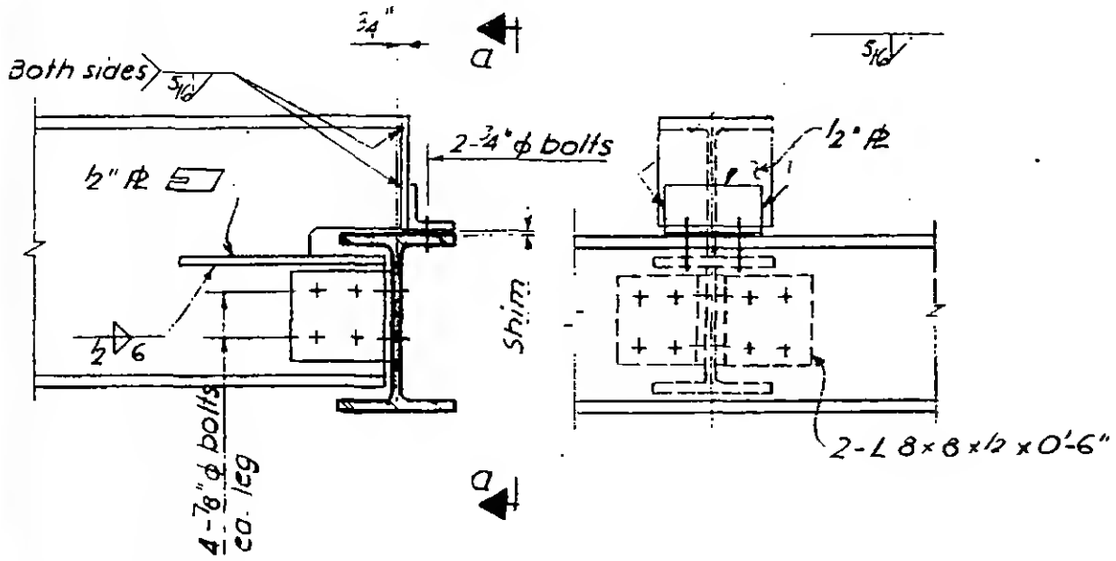

Section a-a

Detail 472 H

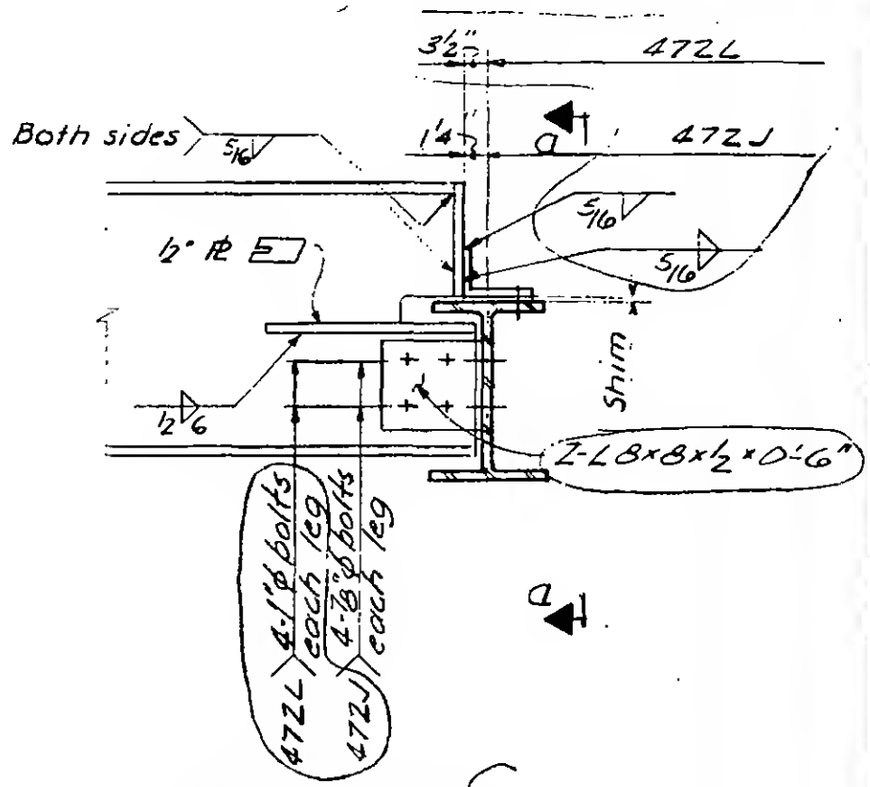

Detail 472 J, L

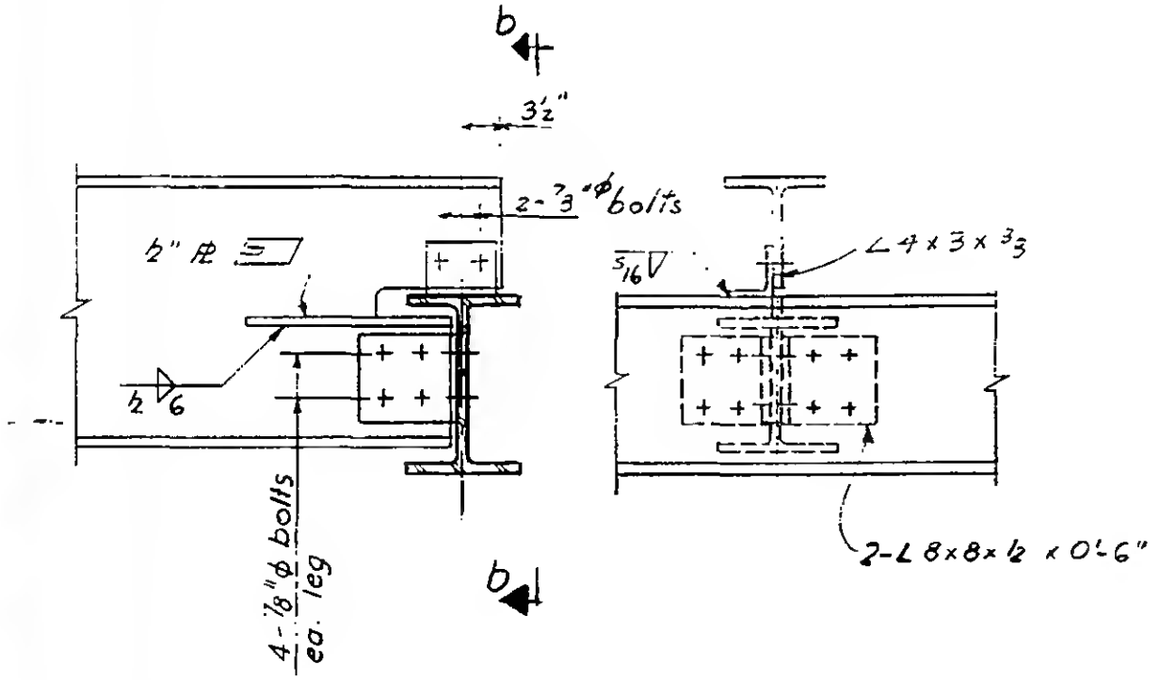

Section b-b

Detail 472 I

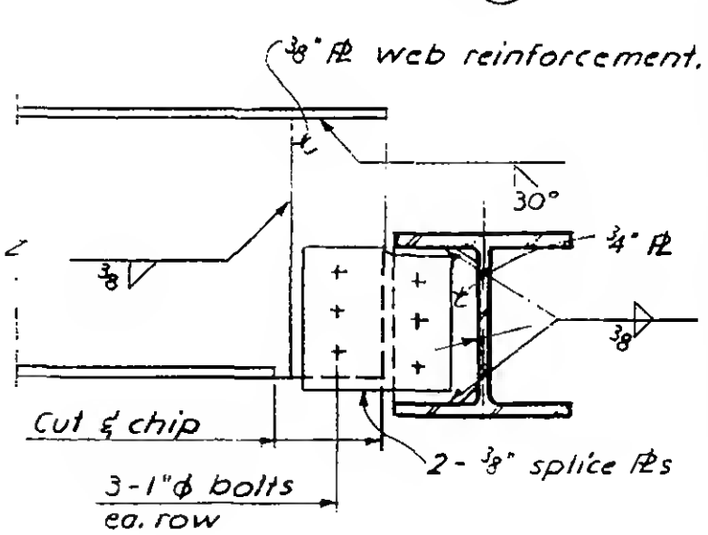

Detail 472 K

LICENSED PROFESSIONAL ENGINEER
LESLIE E. ROBERTSON
No. 34360
UNIVERSITY OF THE STATE OF NEW YORK

6-AB2-123.1