WORTHINGTON, SKILLING, HELLE & JACKSON — Civil & Structural Engineers

PROJECT THE WORLD TRADE CENTER | TITLE CONNECTION DETAIL 474 A | DATE 8-5-67

REVISIONS

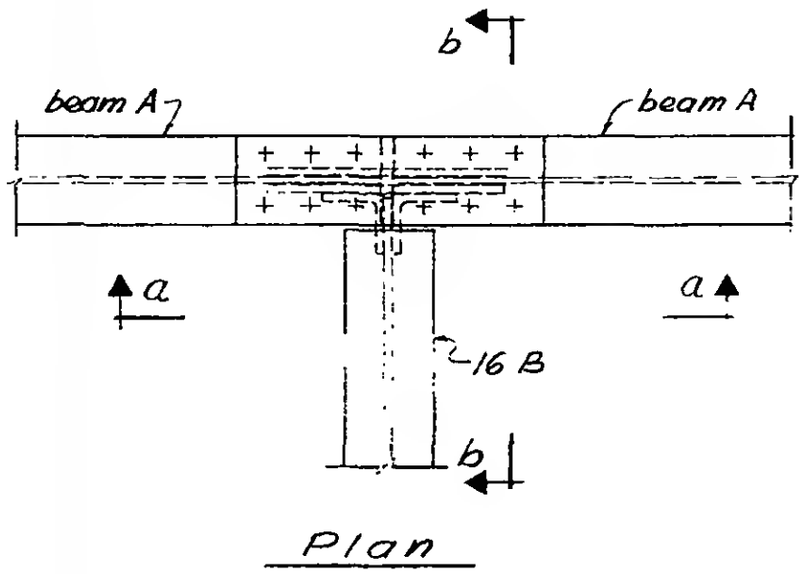

Plan

beams A	bolts K	bolts L	PL P	PL Q	Dim A
16 B	1"ϕ	¾"ϕ	½	½	0'-10"
16 WF	1⅛"ϕ	1"ϕ	⅝	½	0'-10"

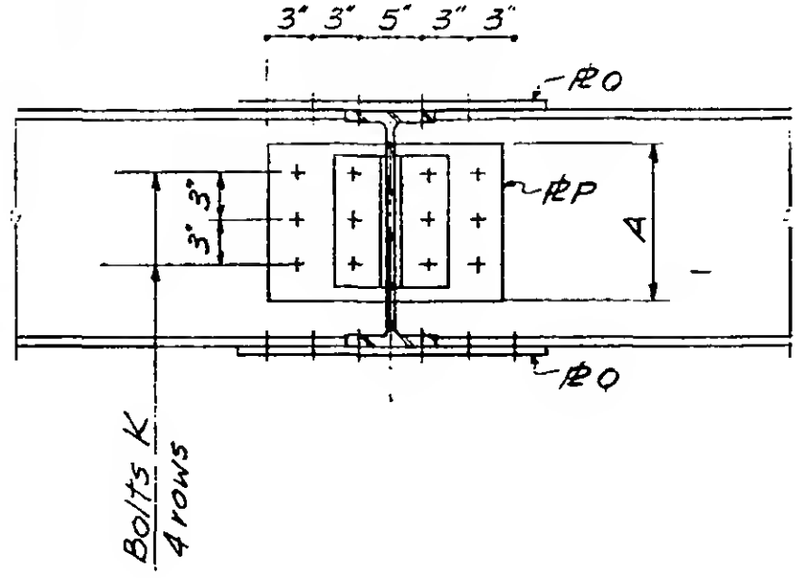

Section a-a

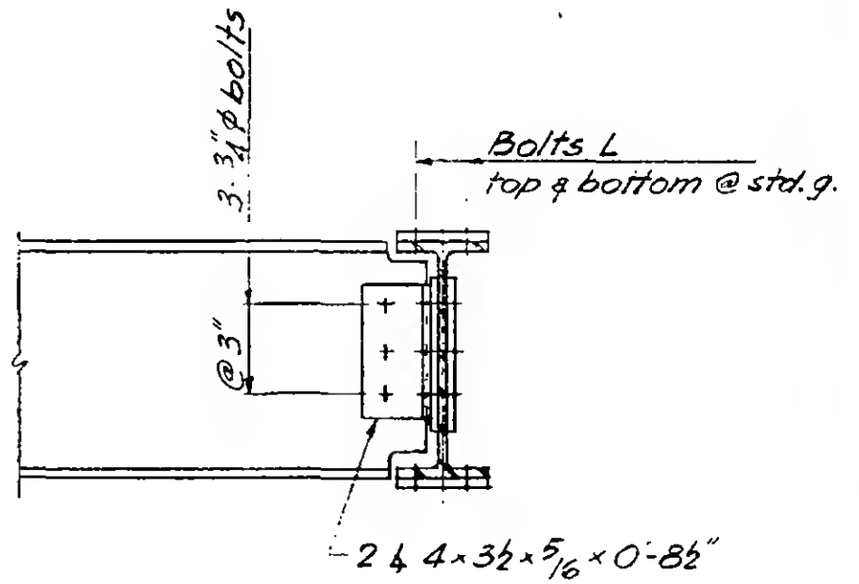

Section b-b

LICENSED PROFESSIONAL ENGINEER
LESLIE E. ROBERTSON
No. 34360
UNIVERSITY OF THE STATE OF NEW YORK

6-AB2-125