WORTHINGTON, SKILLING, HELLE & JACKSON Civil & Structural Engineers

PROJECT WORLD TRADE CENTER | TITLE CONNECTION DETAIL 489 | DATE 7/20/67

REVISIONS

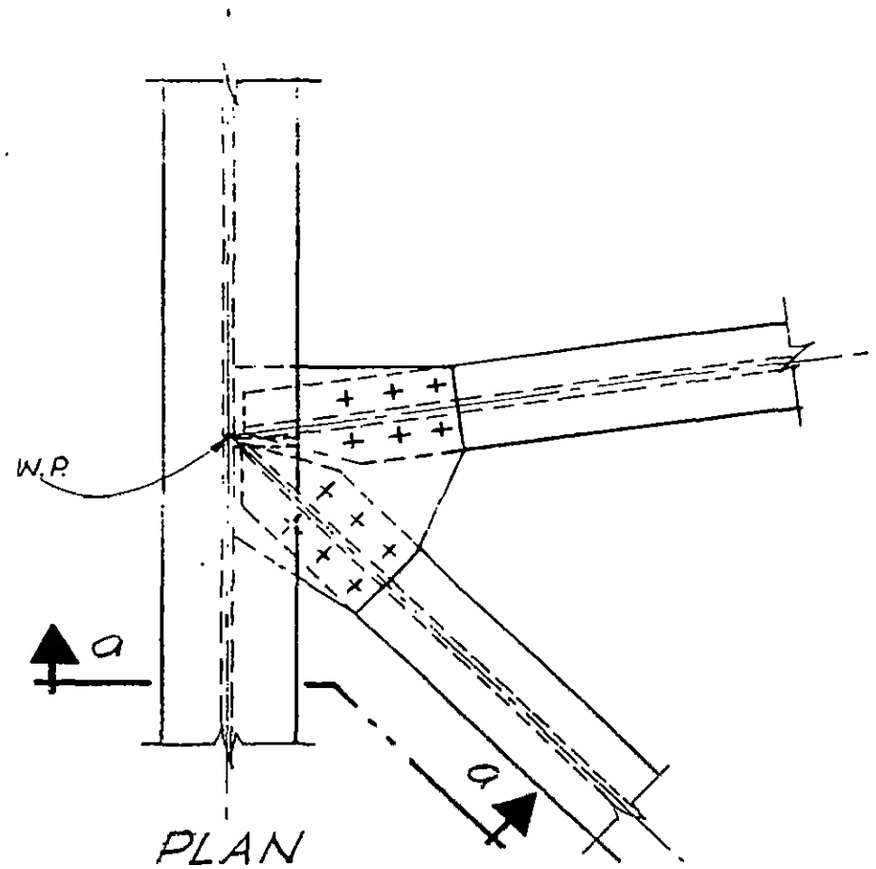

PLAN

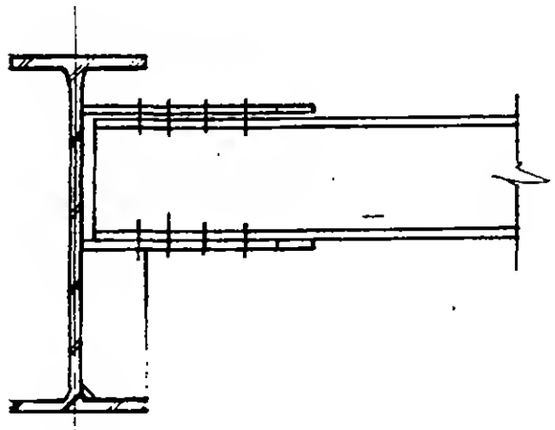

SECTION a-a

LICENSED PROFESSIONAL ENGINEER
LESLIE E. ROBERTSON
No. 34360
THE STATE OF NEW YORK

6-A82-140