SKILLING - HELLE - CHRISTIANSEN - ROBERTSON Structural & Civil Engineers

PROJECT THE WORLD TRADE CENTER | TITLE CONNECTION DETAIL 494A | DATE 9-29-67

REVISIONS

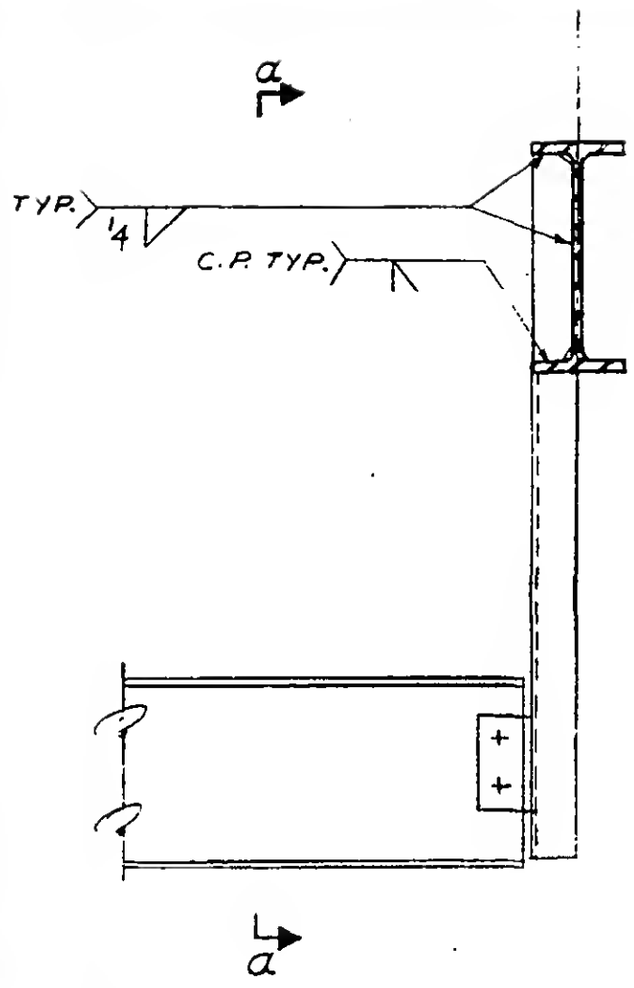

ELEVATION

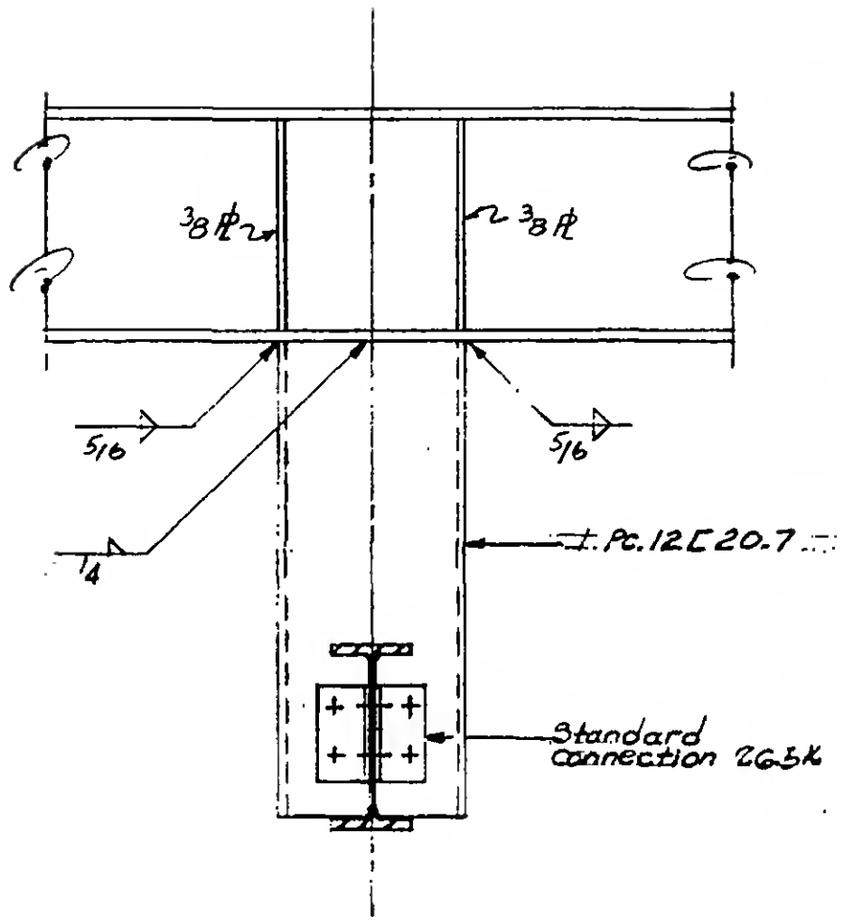

Section a-a

LICENSED PROFESSIONAL ENGINEER
LESLIE E. ROBERTS
No. 34360
UNIVERSITY OF THE STATE OF N.Y.

6-AB2-145