WORTHINGTON, SKILLING, HELLE & JACKSON — Civil & Structural Engineers

PROJECT: THE WORLD TRADE CENTER | TITLE: CONNECTION DETAILS 501A & 502A | DATE: 5-9-67

REVISIONS

5-67

10-2-67

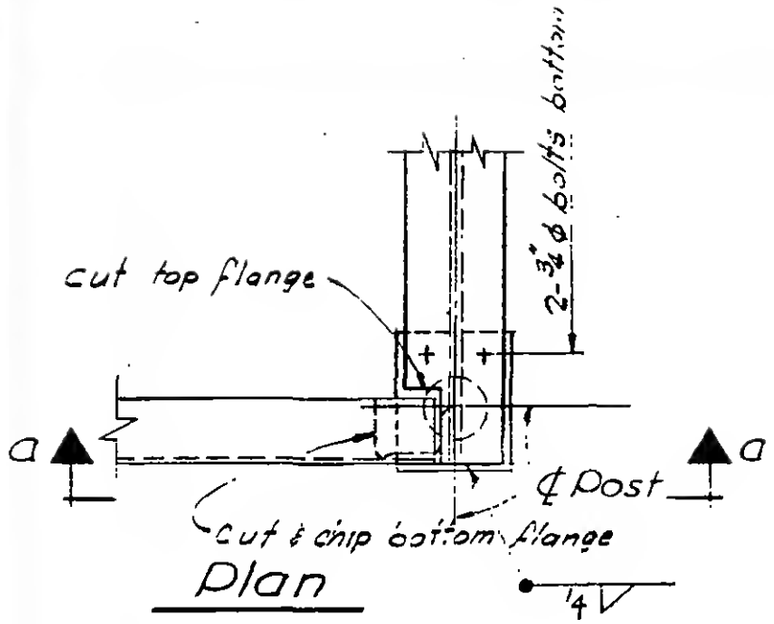

Plan

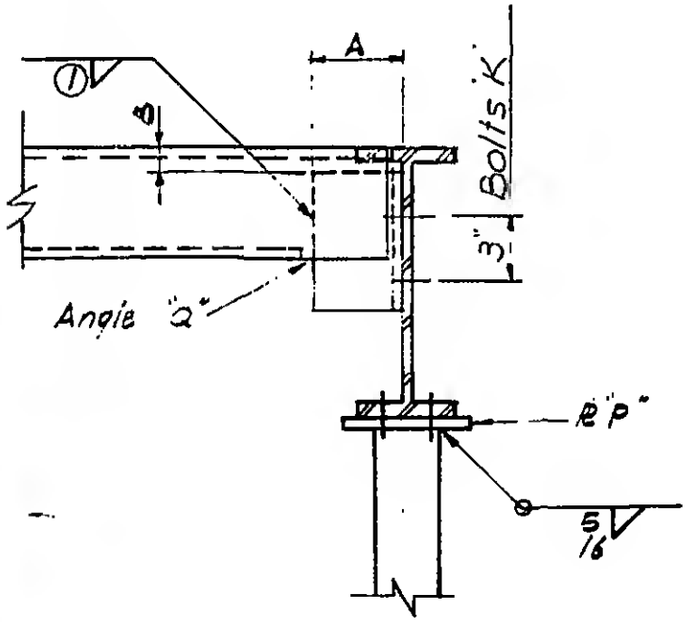

Section a-a

DETAIL 501A

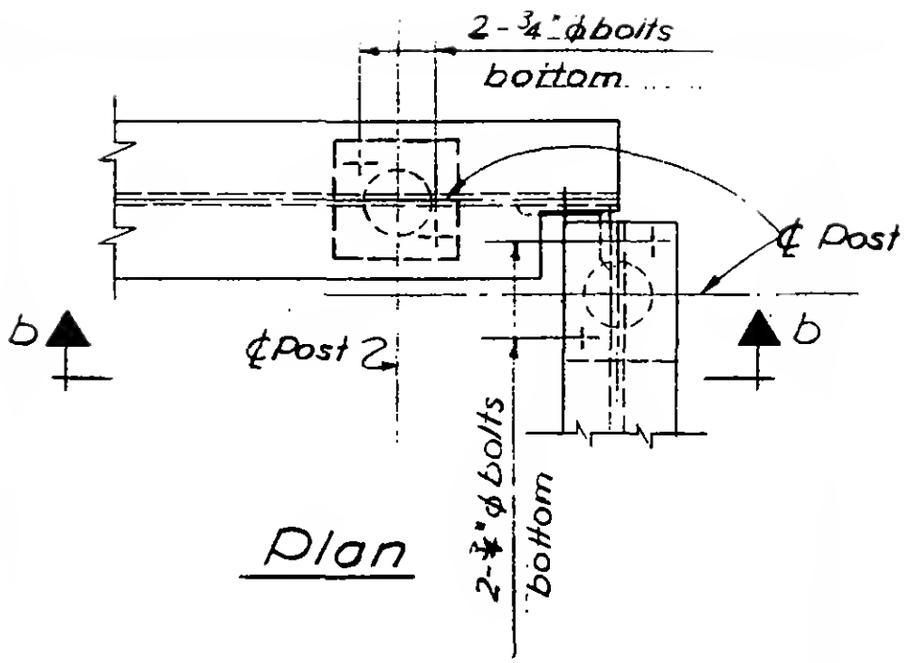

Plan

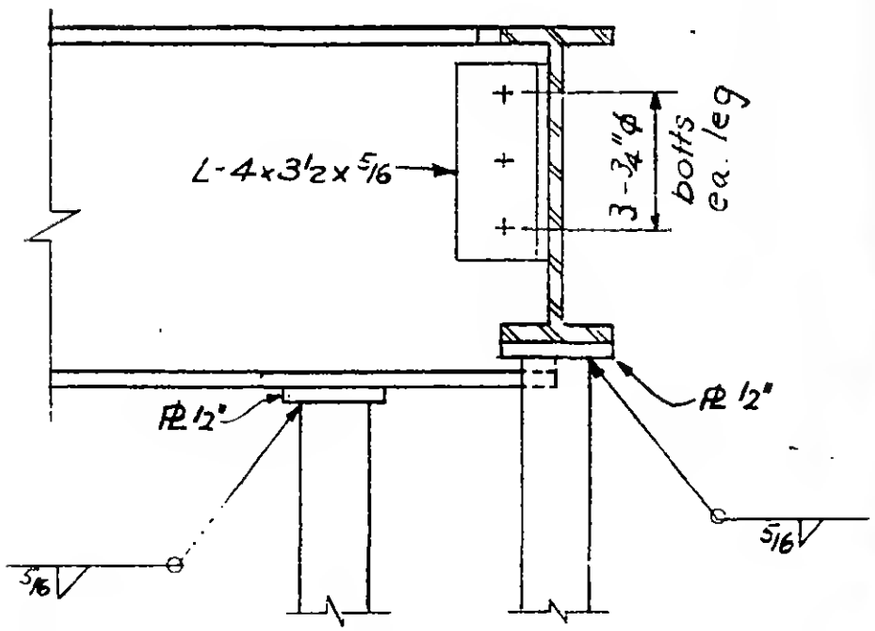

Section b-b

DETAIL 502A

G-AB2-152

LESLIE E. ROBERTSON PROFESSIONAL ENGINEER NO. 34360 UNIVERSITY OF THE STATE OF NEW YORK