WORTHINGTON, SKILLING, HELLE & JACKSON — Civil & Structural Engineers

PROJECT THE WORLD TRADE CENTER | TITLE CONNECTION DETAILS. 503 A,B, & 504 A | DATE 5-9-67

REVISIONS
5-67
8-14-67

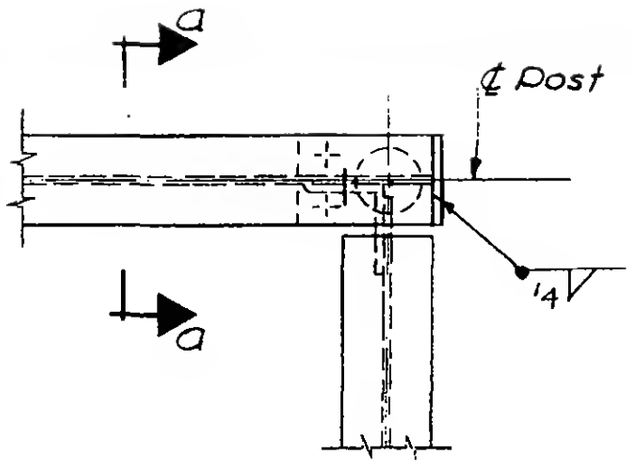

Plan

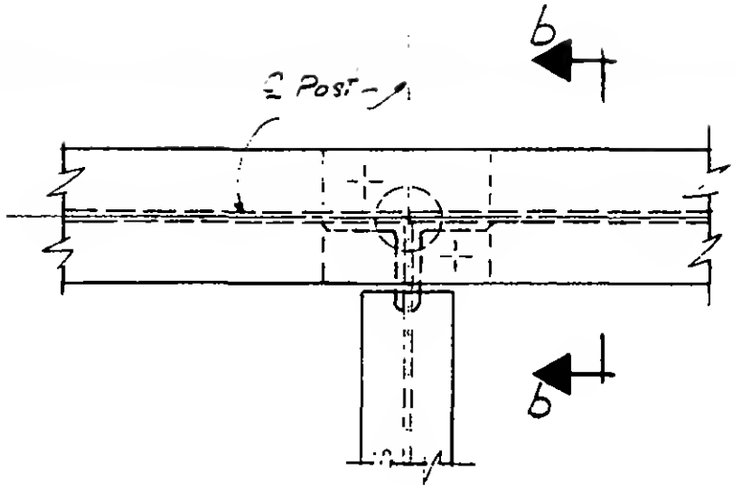

Plan

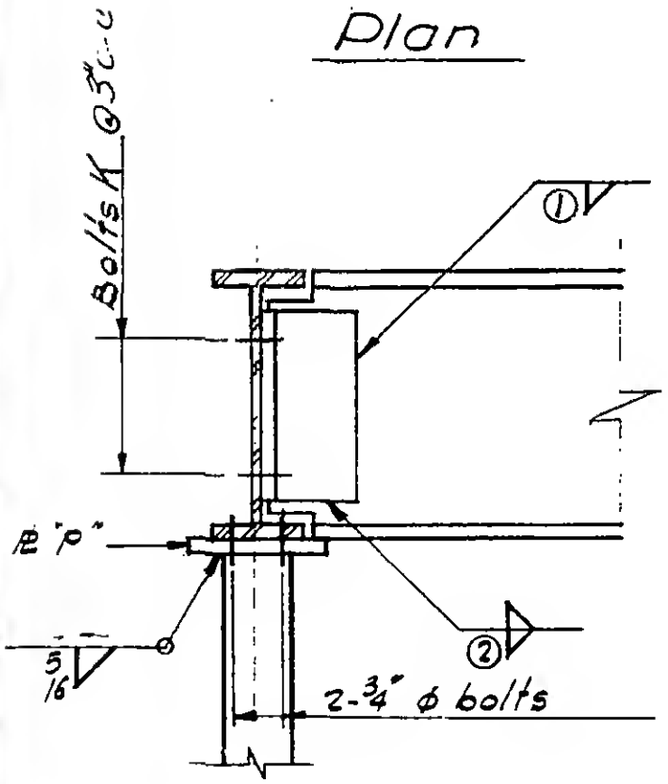

Section a-a

Deeper of two beams sits on post. If two beams of same depth see beam schedule

DETAIL 503 A,B

std. conn. 18.0K

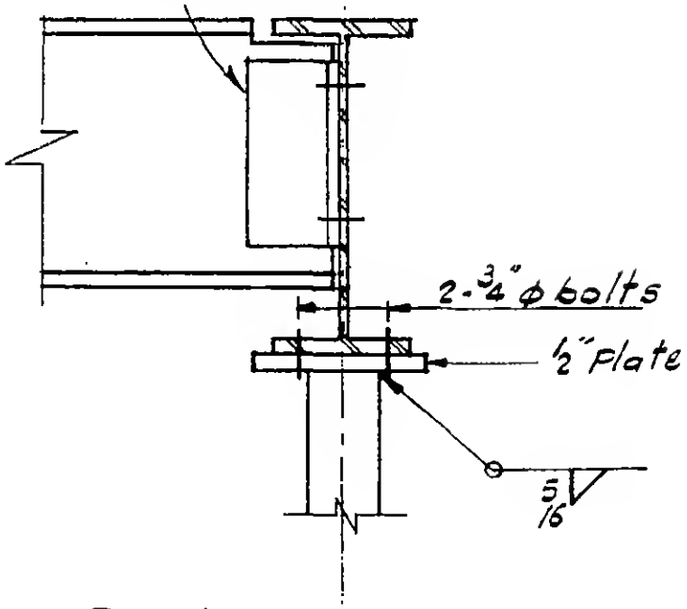

Section b-b

DETAIL 504 A

6-AB2-153

LICENSED PROFESSIONAL ENGINEER
LESLIE E. ROBERTSON
No. 34360
UNIVERSITY OF THE STATE OF NEW YORK