WORTHINGTON, SKILLING, HELLE & JACKSON — Civil & Structural Engineers

PROJECT: THE WORLD TRADE CENTER | TITLE: CONNECTION DETAILS 505 A,B & 506 A,B | DATE: 5-9-67

REVISIONS

1-19-67
8-14-67
10-2-67

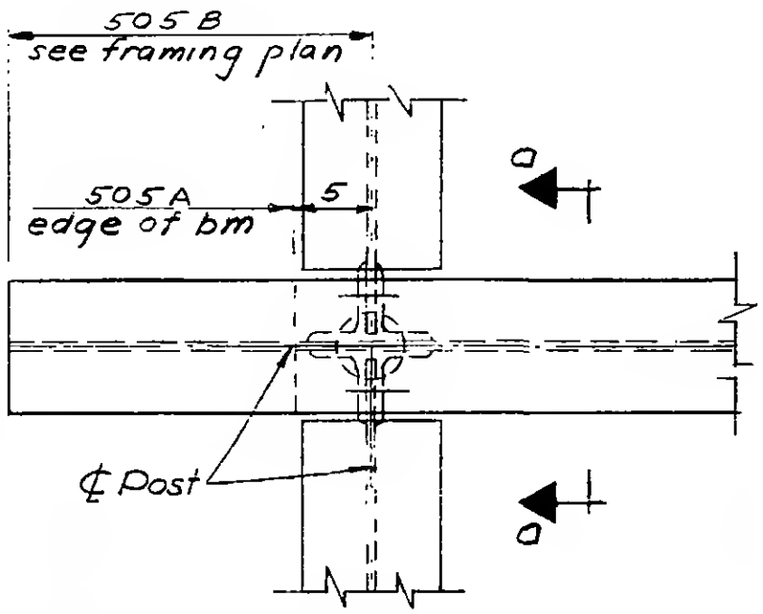

PLAN

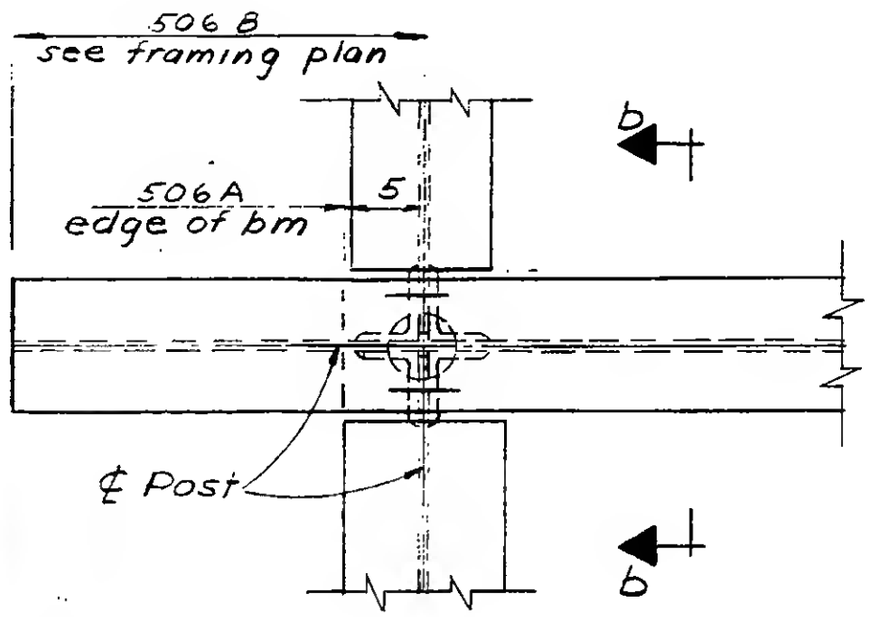

Plan

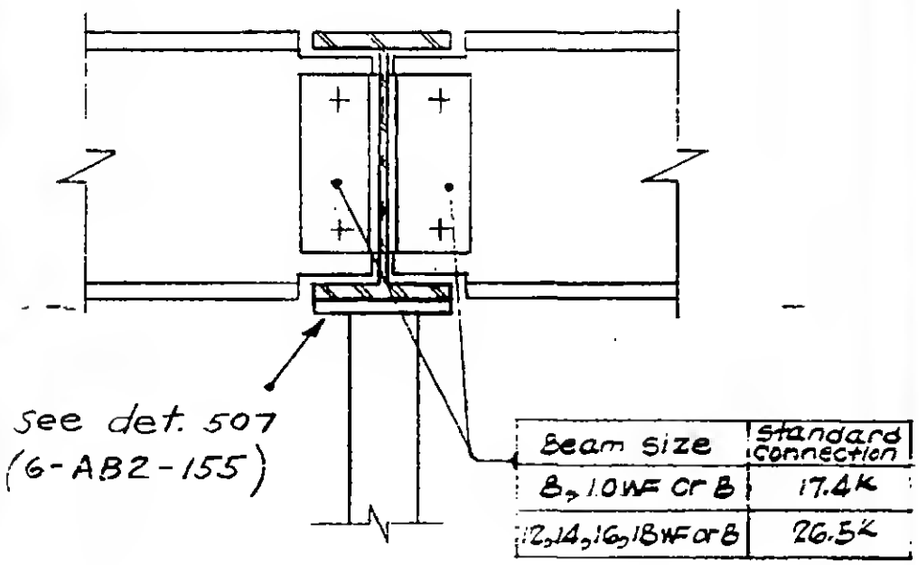

Beam size	standard connection
8, 10 WF or B	17.4K
12, 14, 16, 18 WF or B	26.5K

SECTION a-a

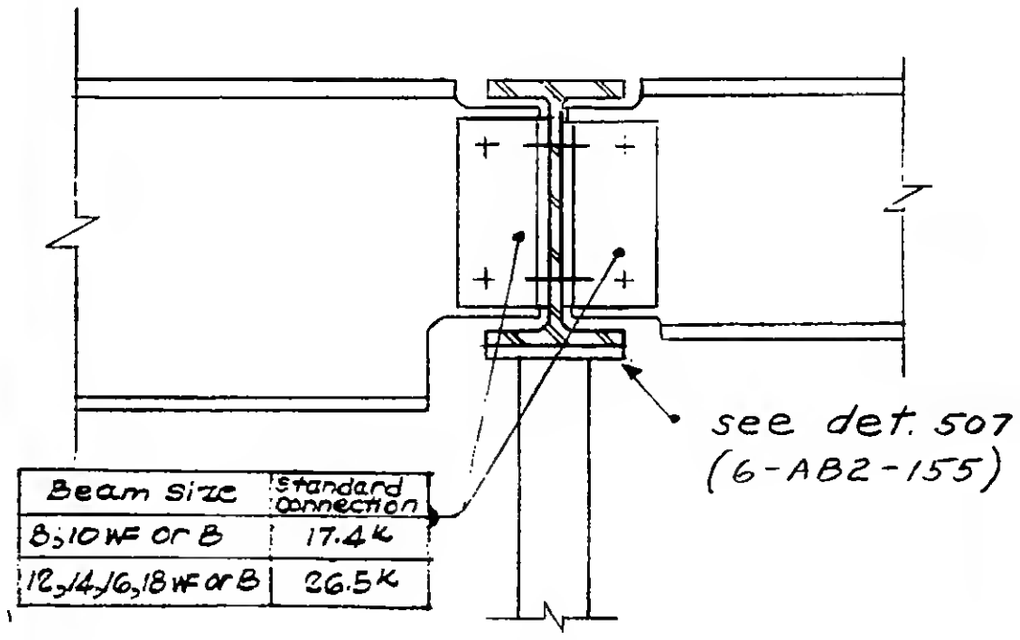

Beam size	standard connection
8, 10 WF or B	17.4K
12, 14, 16, 18 WF or B	26.5K

SECTION b-b

DETAIL 505

DETAIL 506

6-AB2-154

LICENSED PROFESSIONAL ENGINEER
LESLIE E. ROBERTSON
No. 34360
UNIVERSITY OF THE STATE OF NEW YORK