WORTHINGTON, SKILLING, HELLE & JACKSON — Civil & Structural Engineers

PROJECT: THE WORLD TRADE CENTER | TITLE: CONNECTION DETAILS 508 & 512 | DATE: 6-5-67

REVISIONS
·17-67

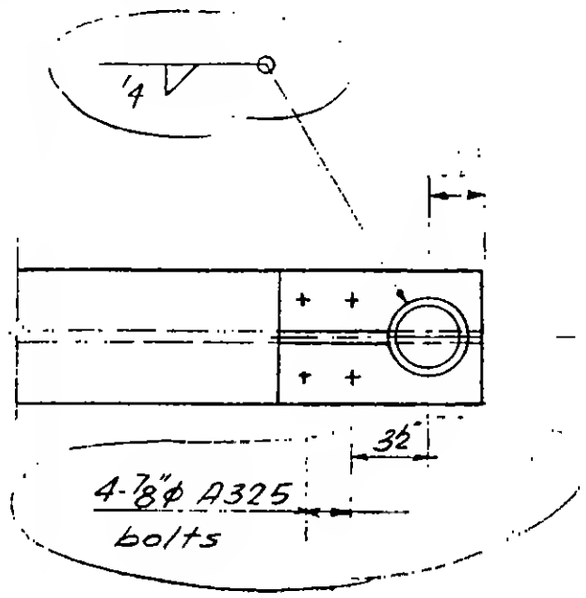

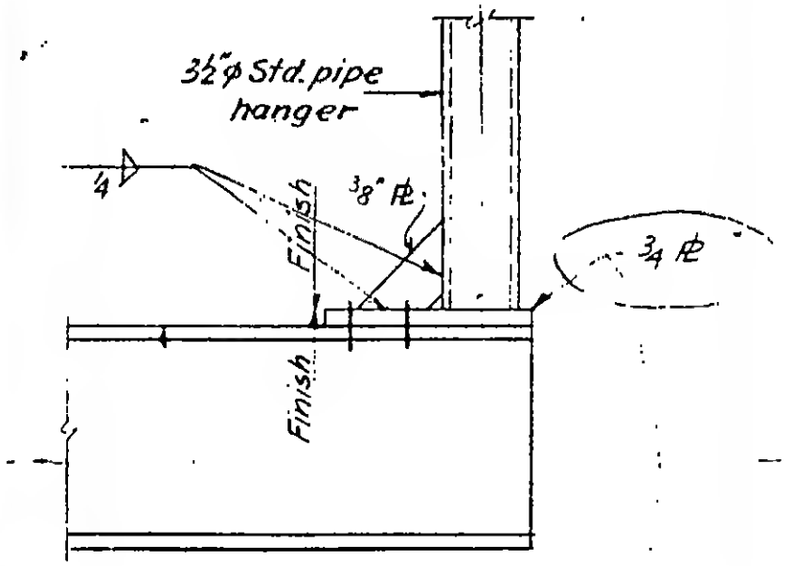

Detail 508

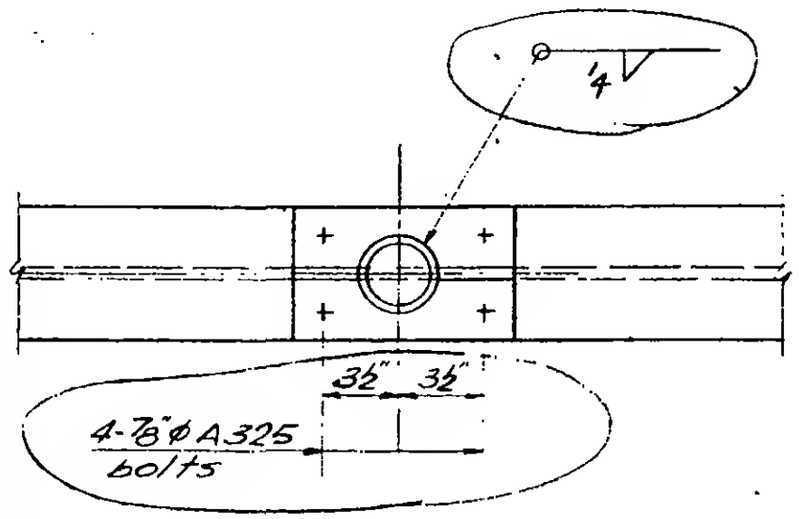

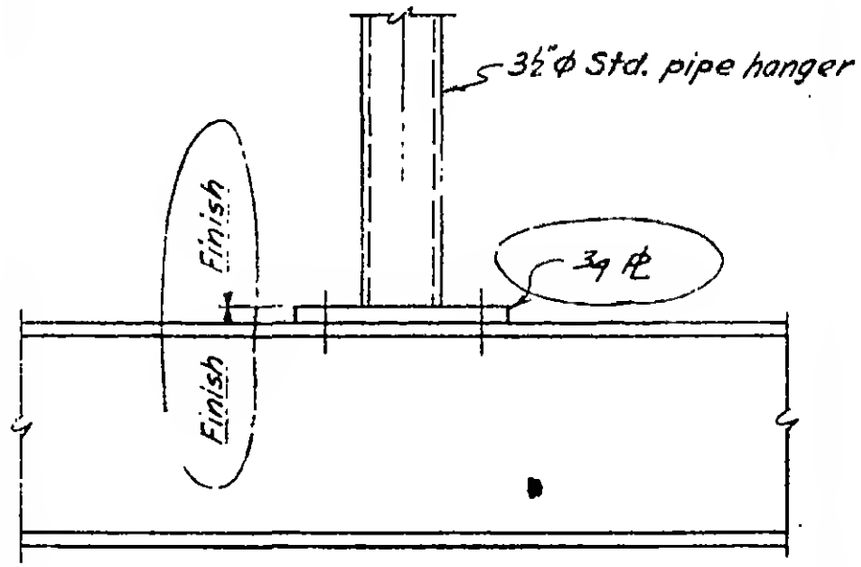

Detail 512

LICENSED PROFESSIONAL ENGINEER
LESLIE E. ROBERTSON
No. 34360
LICENSED BY THE STATE OF NEW YORK

6-AB2-156 ALT.