WORTHINGTON, SKILLING, HELLE & JACKSON — Civil & Structural Engineers

PROJECT THE WORLD TRADE CENTER | TITLE CONNECTION DETAIL 510 A, B & C. | DATE 6-5-67

REVISIONS

10-2-67
12-21-67
5-7-68

Detail 510A

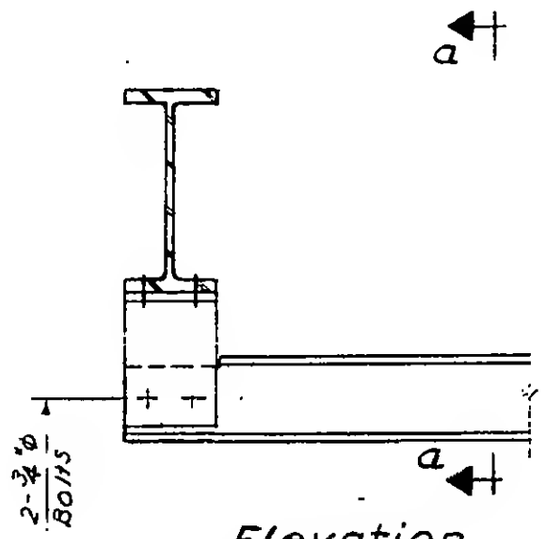

Elevation

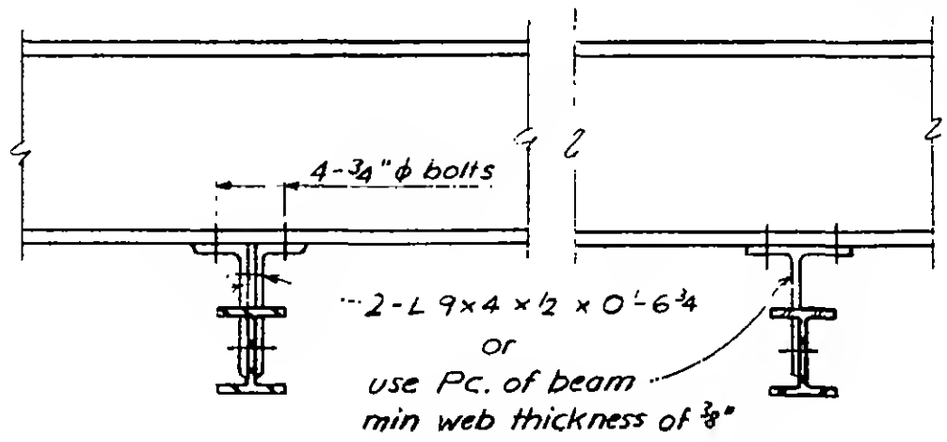

Section a-a

Detail 510 B, C

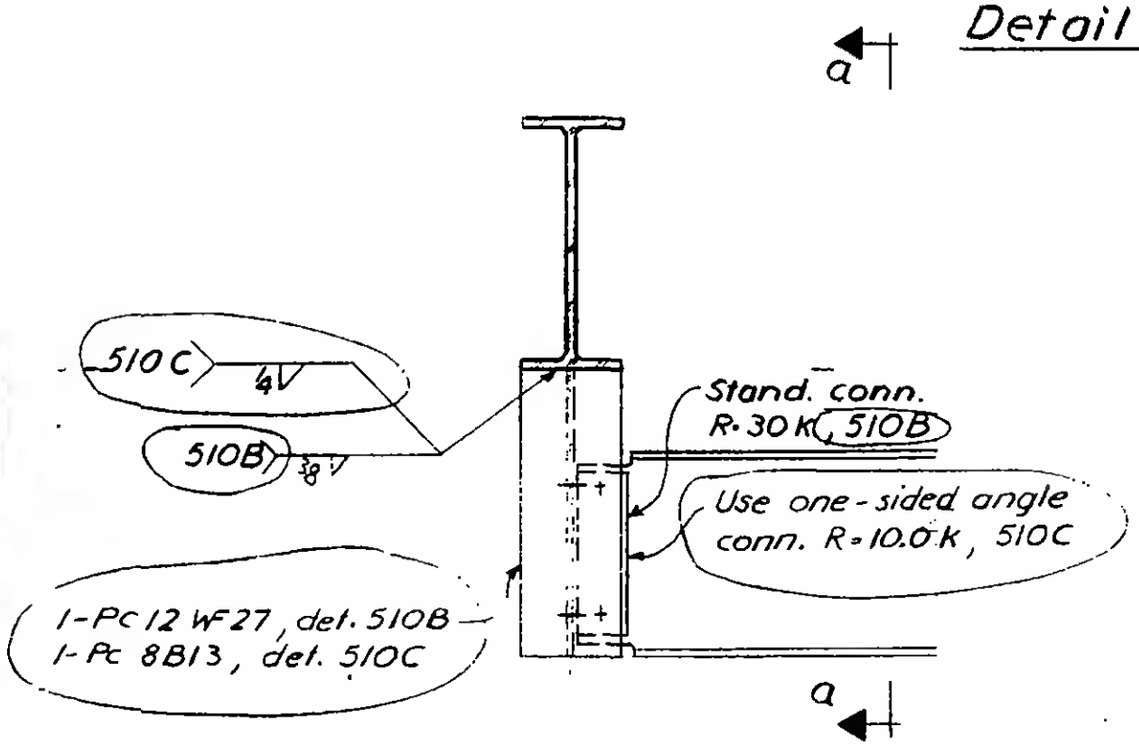

Elevation

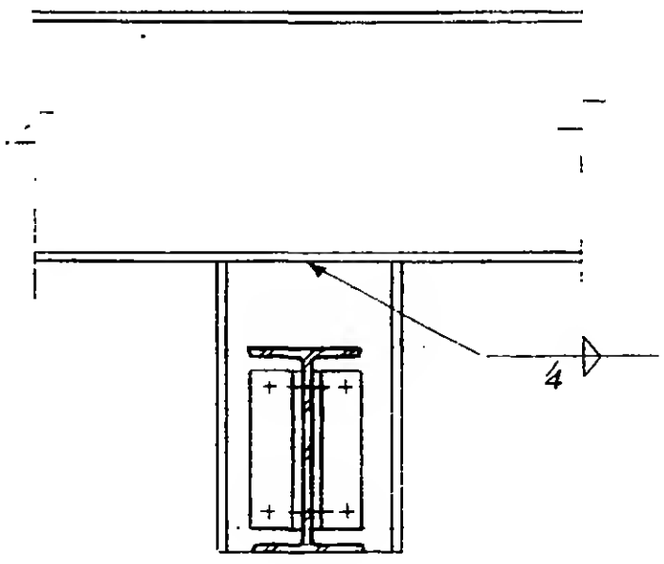

Section a-a

6-AB2-158