SKILLING - HELLE - CHRISTIANSEN - ROBERTSON Structural & Civil Engineers

PROJECT THE WORLD TRADE CENTER | TITLE CONNECTION DETAILS 521 & 522 | DATE 8-5-67

REVISIONS

9-29-67

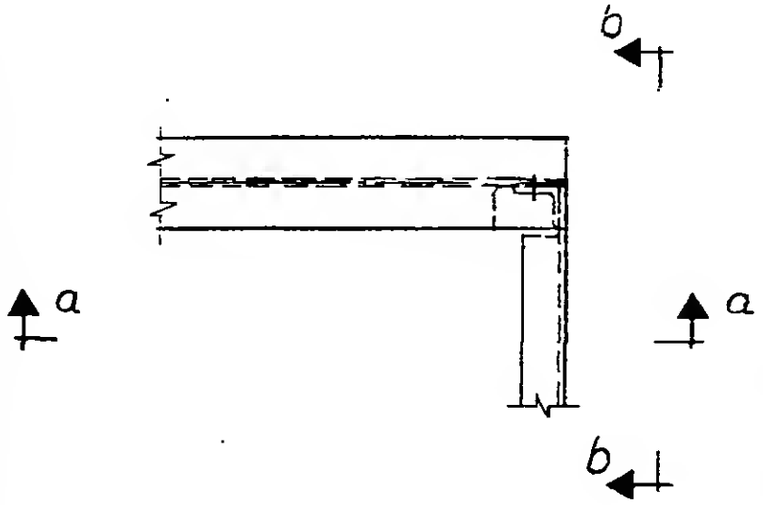

Plan

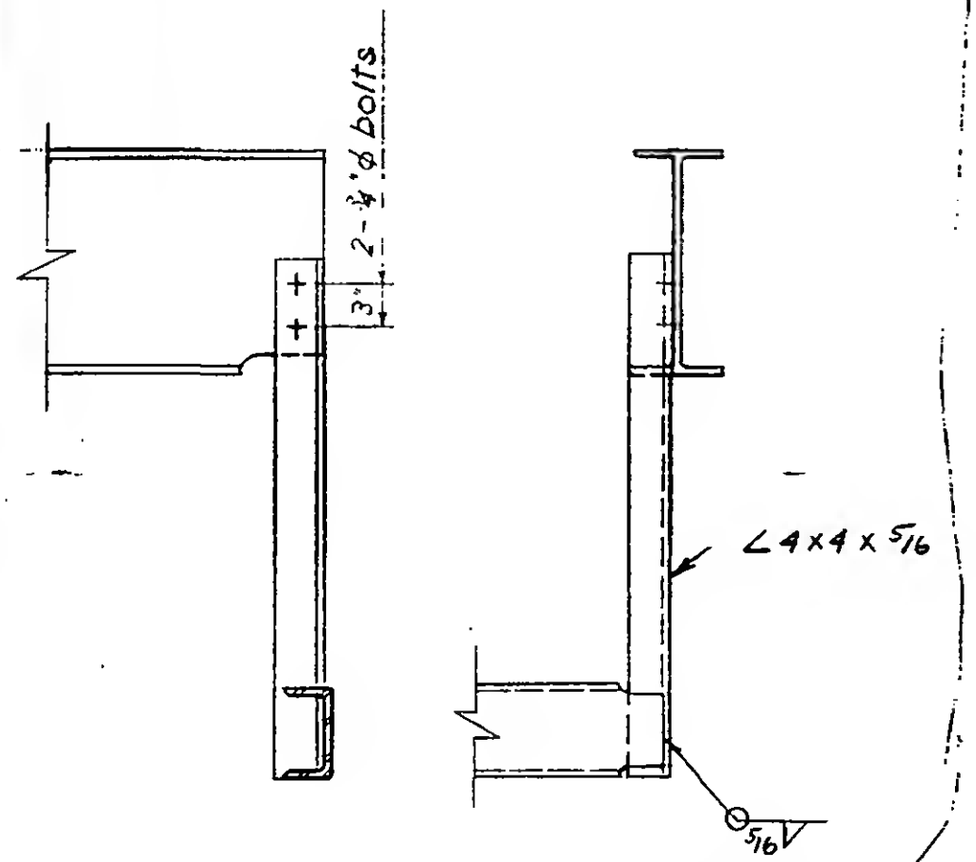

Section a-a Section b-b

DETAIL 521

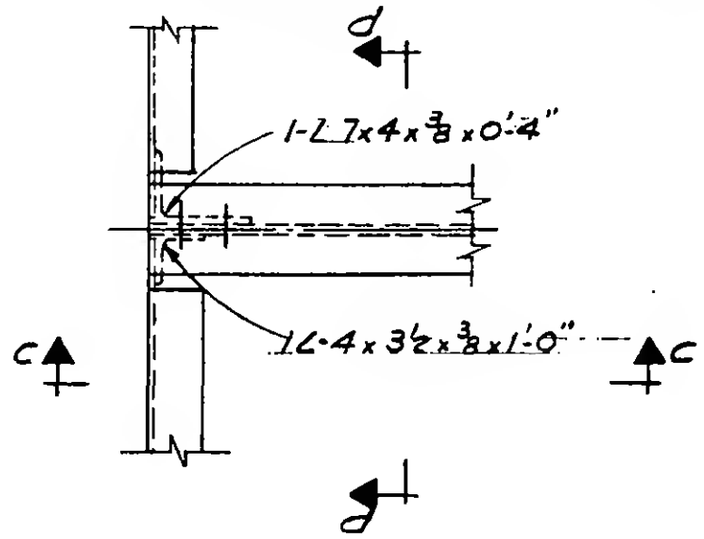

Plan

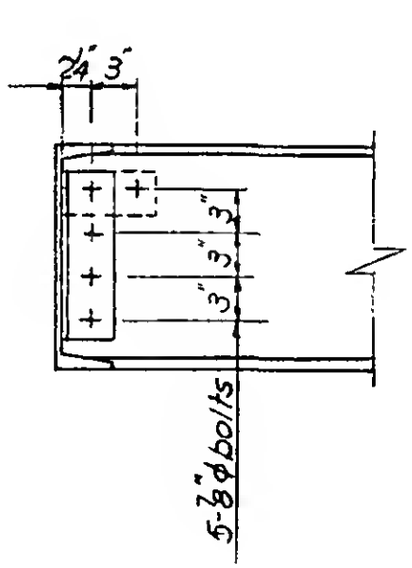

Section c-c

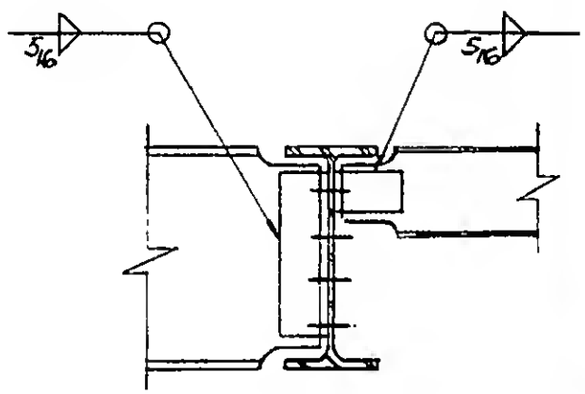

Section d-d

DETAIL 522

6-AB2-168

LICENSED PROFESSIONAL ENGINEER
LESLIE E. ROBERTSON
No. 34360
UNIVERSITY OF THE STATE OF NEW YORK