SKILLING - HELLE - CHRISTIANSEN - ROBERTSON Structural & Civil Engineers

PROJECT THE WORLD TRADE CENTER | TITLE CONNECTION DETAIL 527A | DATE 8-14-67

REVISIONS

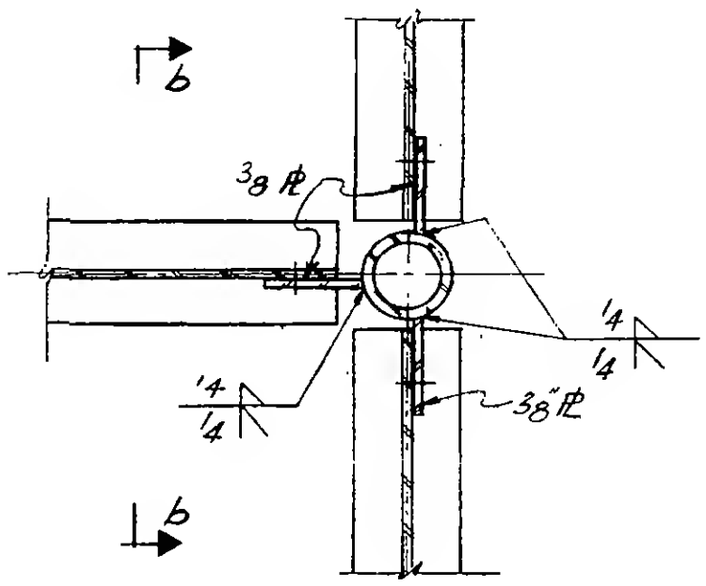

Plan a-a

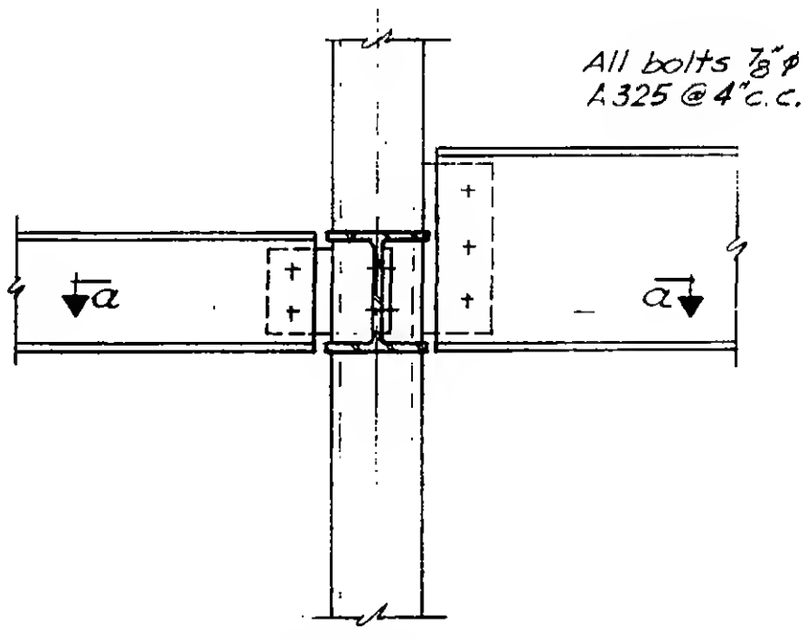

Section 6-b

LICENSED PROFESSIONAL ENGINEER
LESLIE E. ROBERTSON
No. 24360
STATE OF NEW YORK

6-AB2-172