SKILLING - HELLE - CHRISTIANSEN - ROBERTSON Structural & Civil Engineers

PROJECT THE WORLD TRADE CENTER | TITLE CONNECTION DETAIL 540A, 541A | DATE 1-10-69

REVISIONS

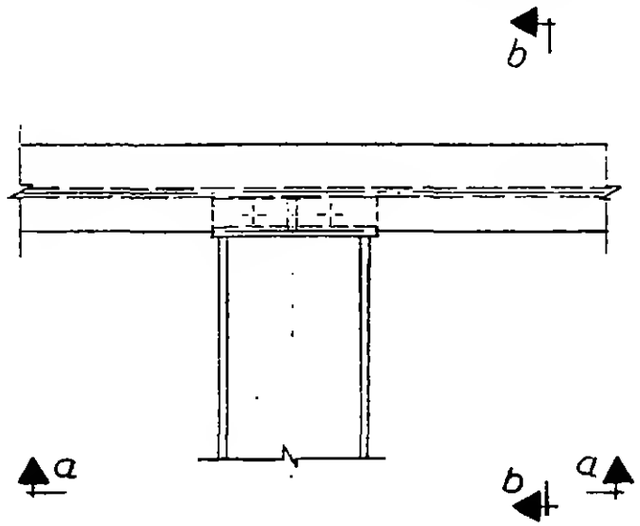

Plan 540A

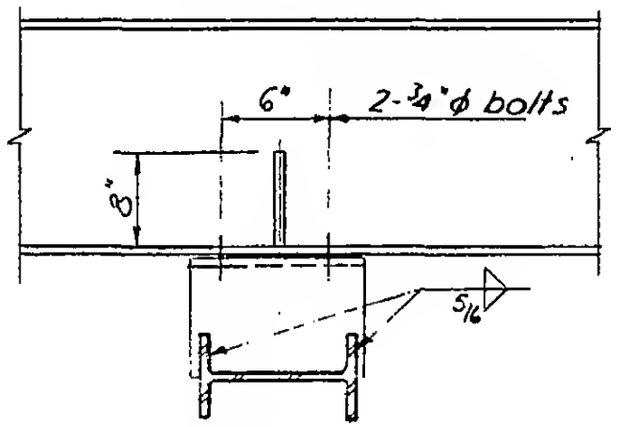

Section a-a

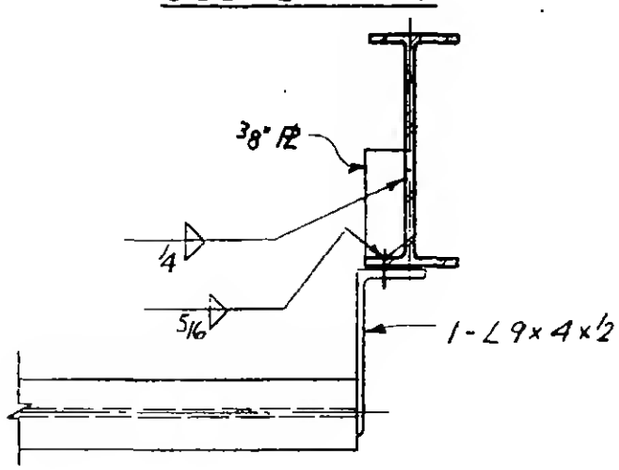

Section b-b

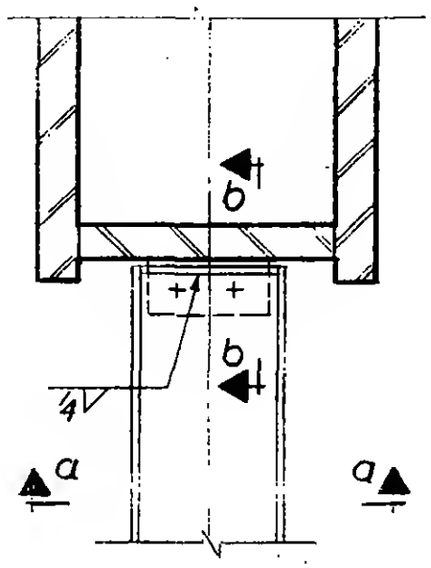

Plan 541A

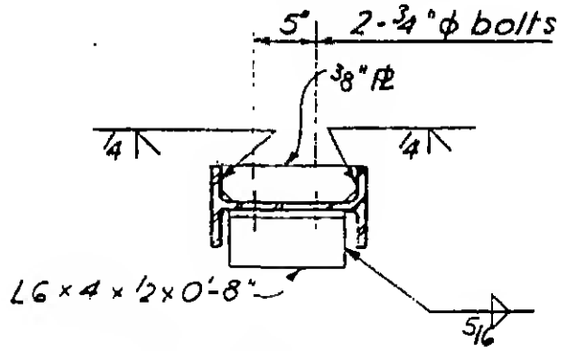

Section a-a

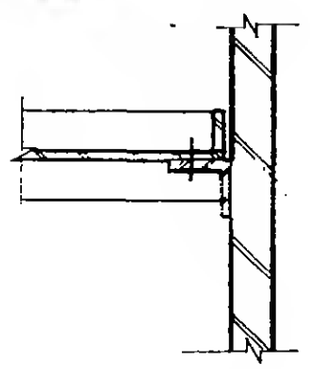

Section b-b

6-AB2-1