SKILLING, HELLE, CHRISTIANSEN, ROBERTSON — Structural & Civil Engineers

PROJECT THE WORLD TRADE CENTER | TITLE DETAIL 543, 544 | DATE 11-22-68

REVISIONS

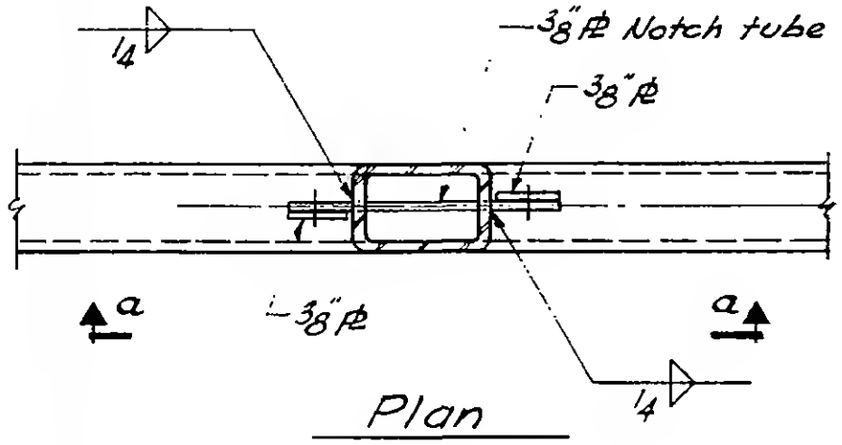

Plan

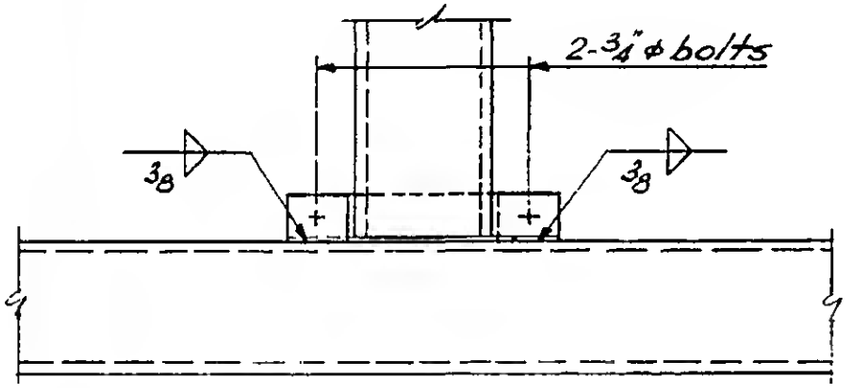

Section a-a

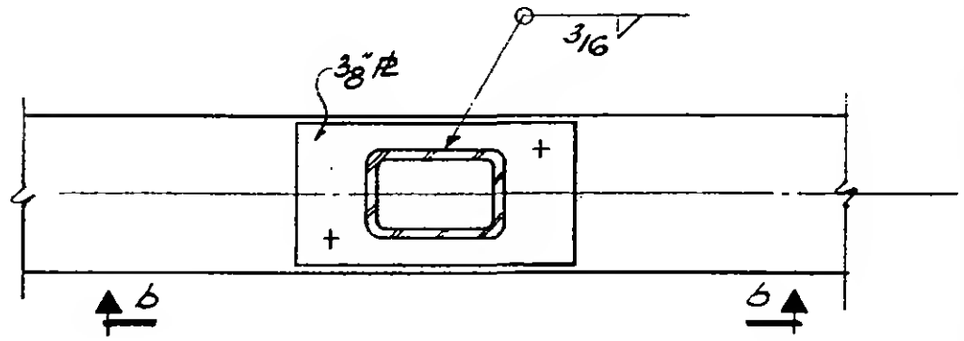

Plan

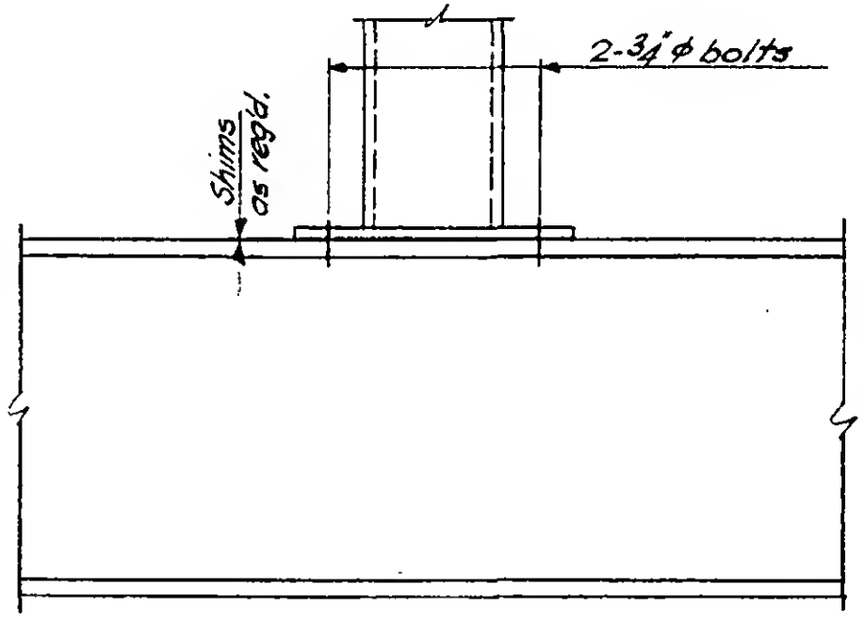

Section b-b

LICENSED PROFESSIONAL ENGINEER
LESLIE E. ROBERTSON
No. 34360
UNIVERSITY OF THE STATE OF NEW YORK

DESIGNED

DRAWN

REVIEWED

DETAIL 543
Connection to tube sections

DETAIL 544
Connection to wf sections

6-AB2-184