WORTHINGTON, SKILLING, HELLE & JACKSON — Civil & Structural Engineers

PROJECT THE WORLD TRADE CENTER | TITLE DETAILS 550, 550A, 551, 552 | DATE 8-5-67

REVISIONS

2-9-68

8-29-68

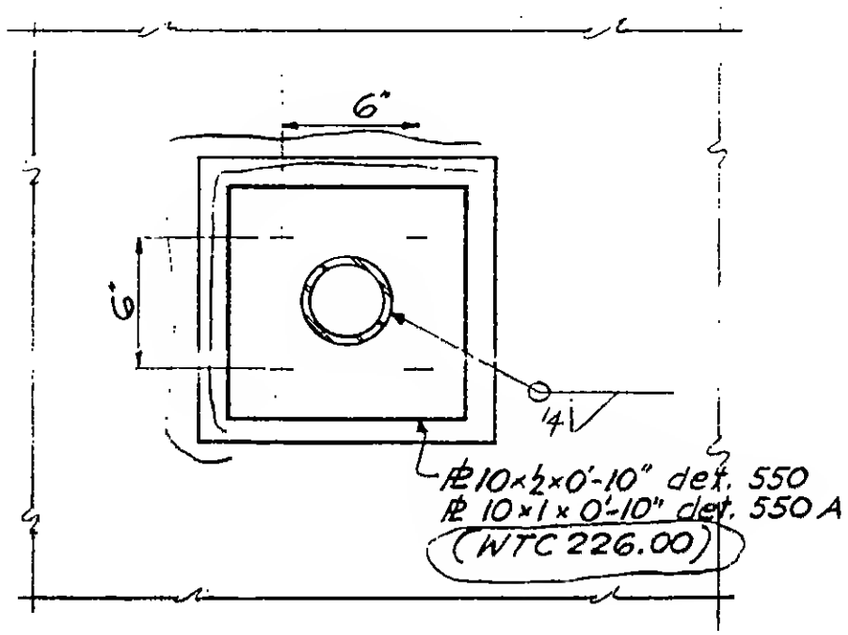

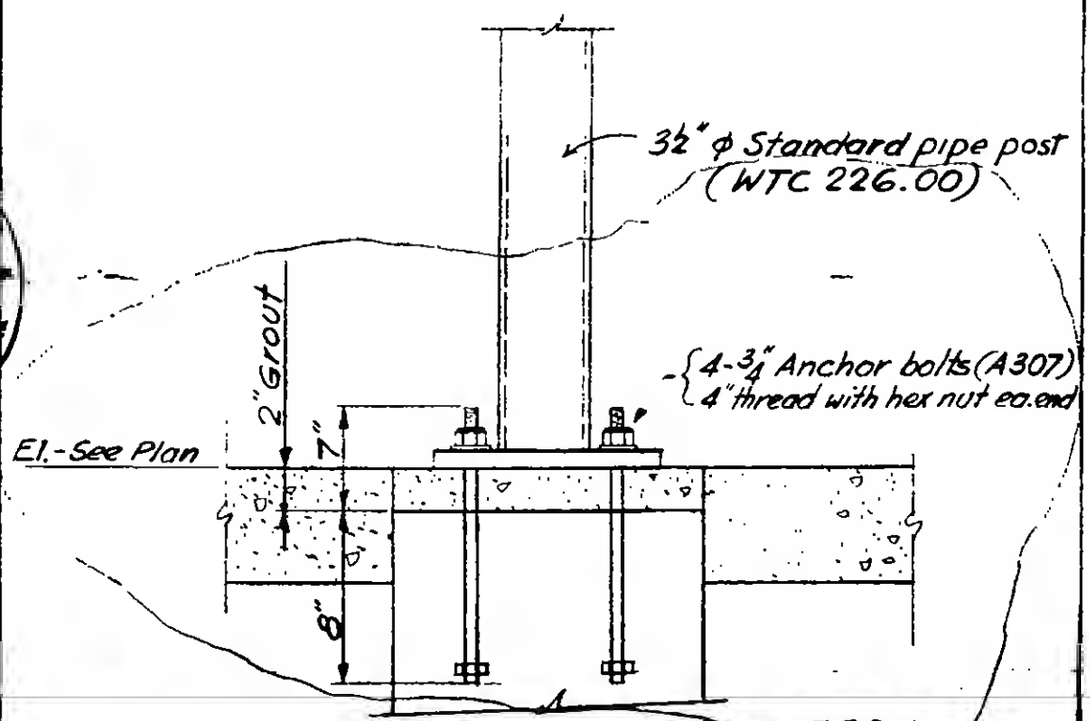

DETAIL 550 & 550A

Note: Detail 552. Deck shelf L to be provided only for posts lying outside of core and @ floors 7, 41, 75 & 108.

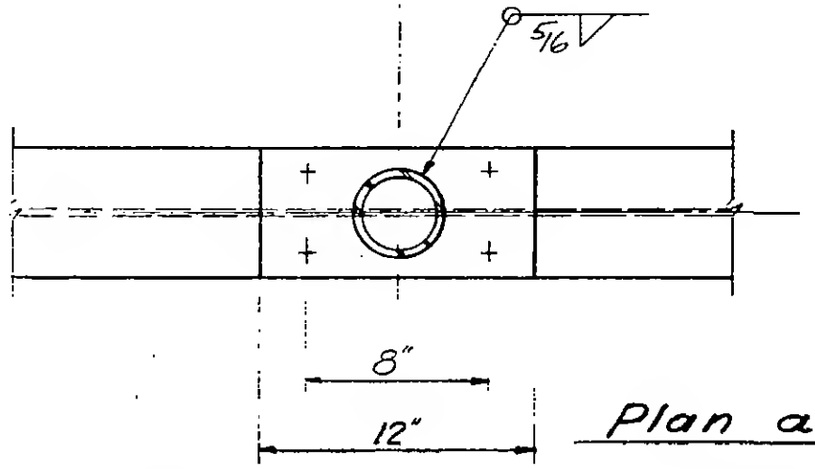

Plan a-a

DETAIL 551 & 552

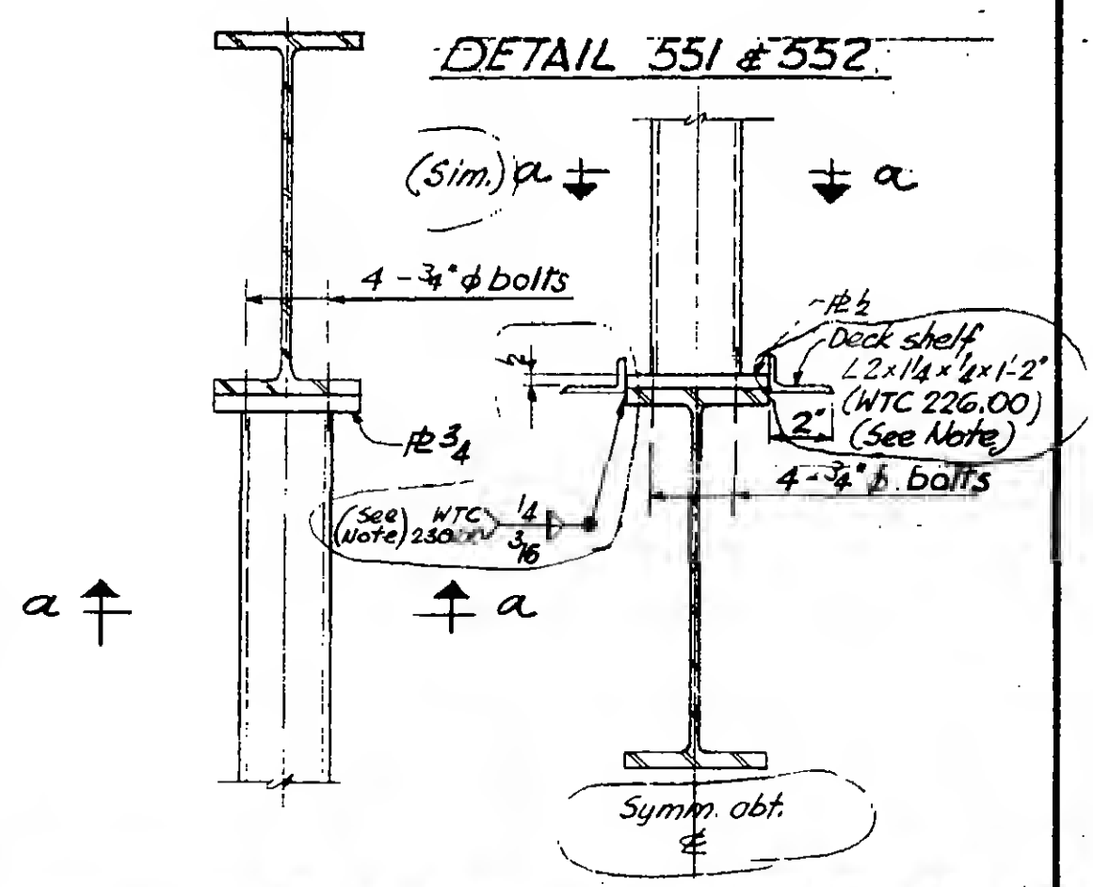

DETAIL 551 (hanger) DETAIL 552 (Post)

6-AB2-197

LICENSED PROFESSIONAL ENGINEER LESLIE E. ROBERTSON No. 34360 UNIVERSITY OF THE STATE OF NEW YORK