WORTHINGTON, SKILLING, HELLE & JACKSON — Civil & Structural Engineers

PROJECT: THE WORLD TRADE CENTER | TITLE: HORIZONTAL TRUSSES H5 TO H9, H39 & H40 | DATE: 12-20-67

REVISIONS

1-24-68
8-29-68

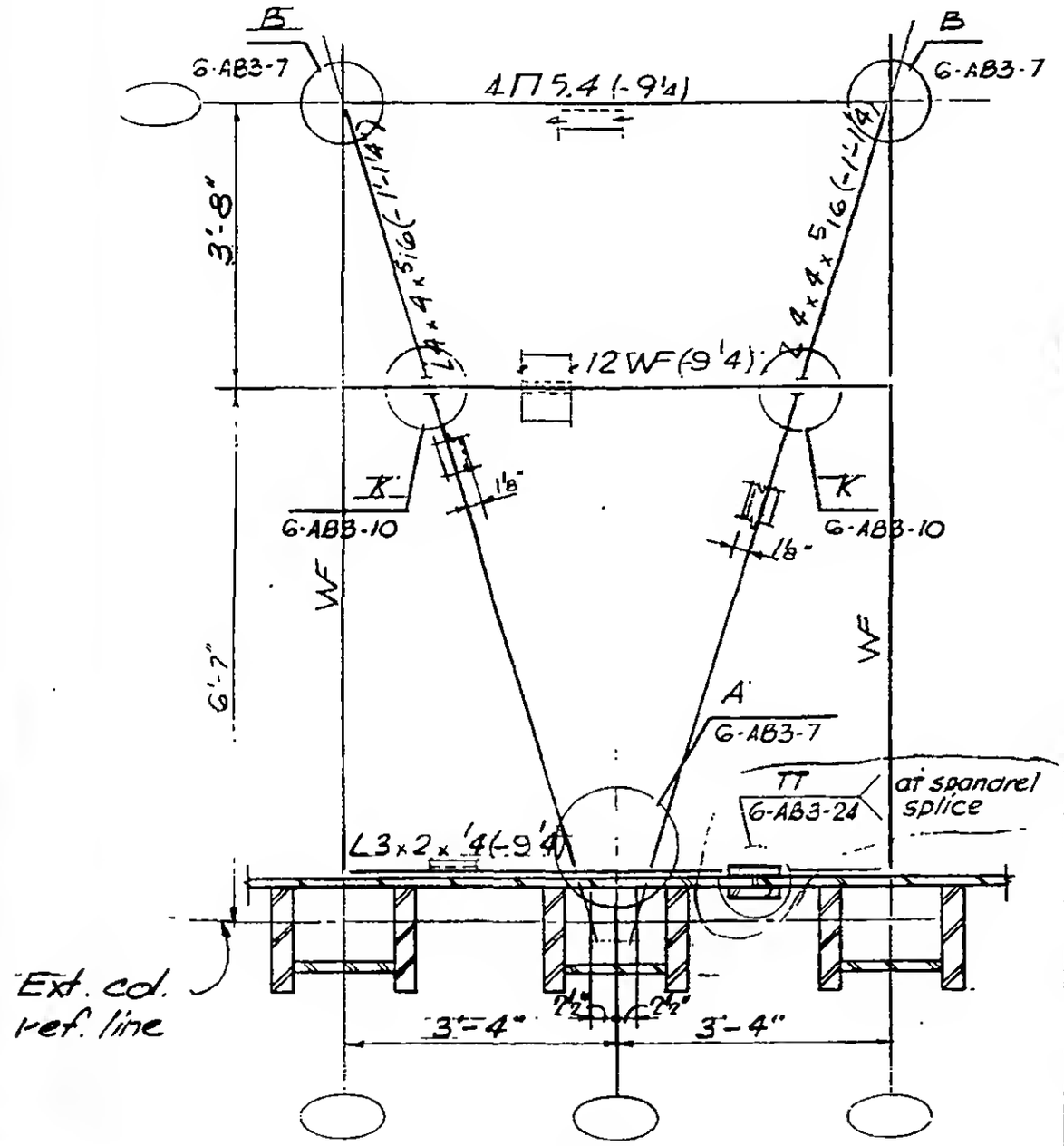

H5

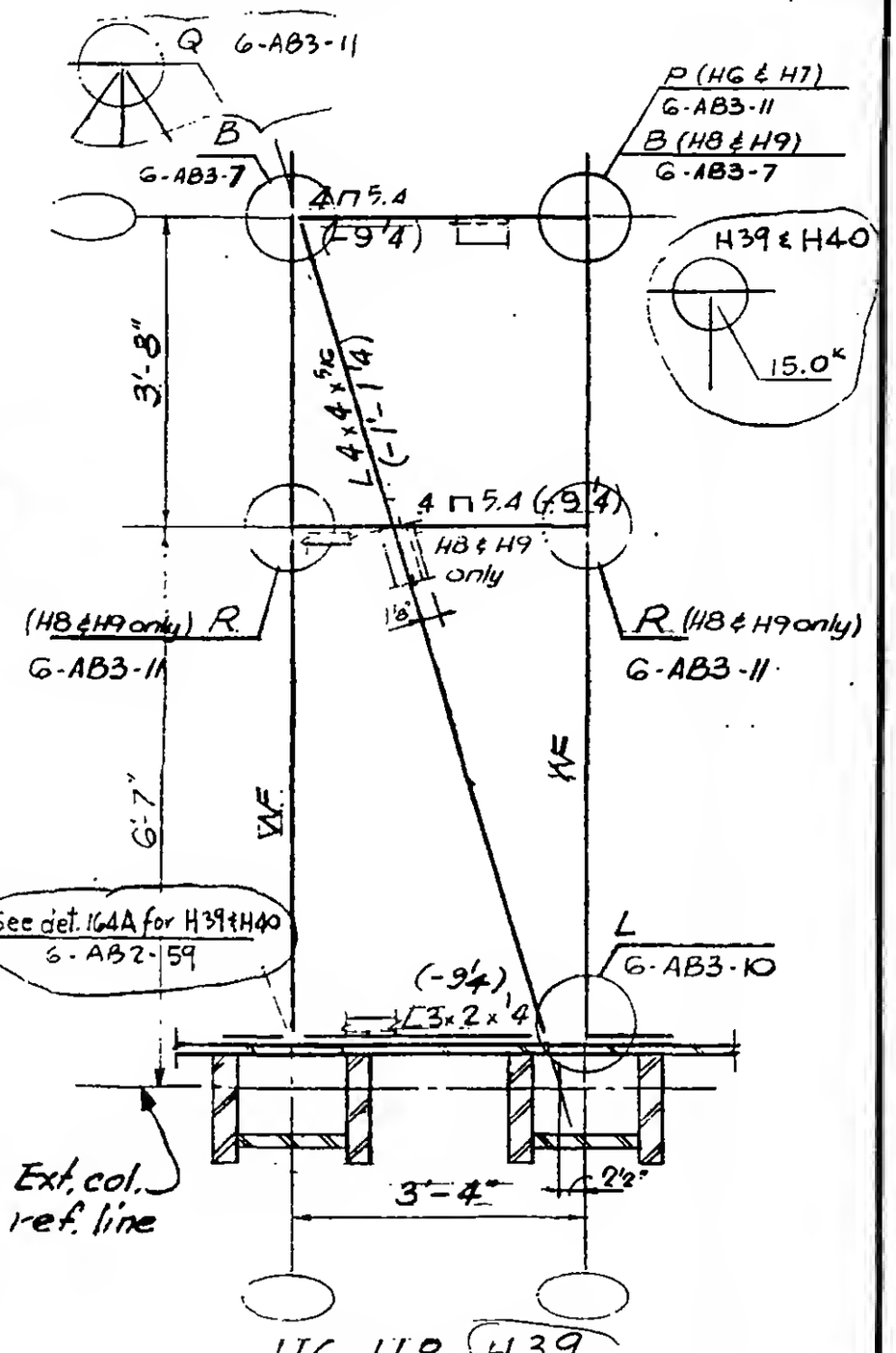

H6, H8, H39
H7, H9, H40 Opp. hand

LICENSED PROFESSIONAL ENGINEER
LESLIE E. ROBERTSON
No. 34960
UNIVERSITY OF THE STATE OF NEW YORK

G-AB3-4