WORTHINGTON, SKILLING, HELLE & JACKSON — Civil & Structural Engineers

PROJECT: THE WORLD TRADE CENTER | TITLE: HORIZONTAL TRUSSES H10, H12, H57, H58 | DATE: 12-20-67

REVISIONS

1-24-68

8-29-68

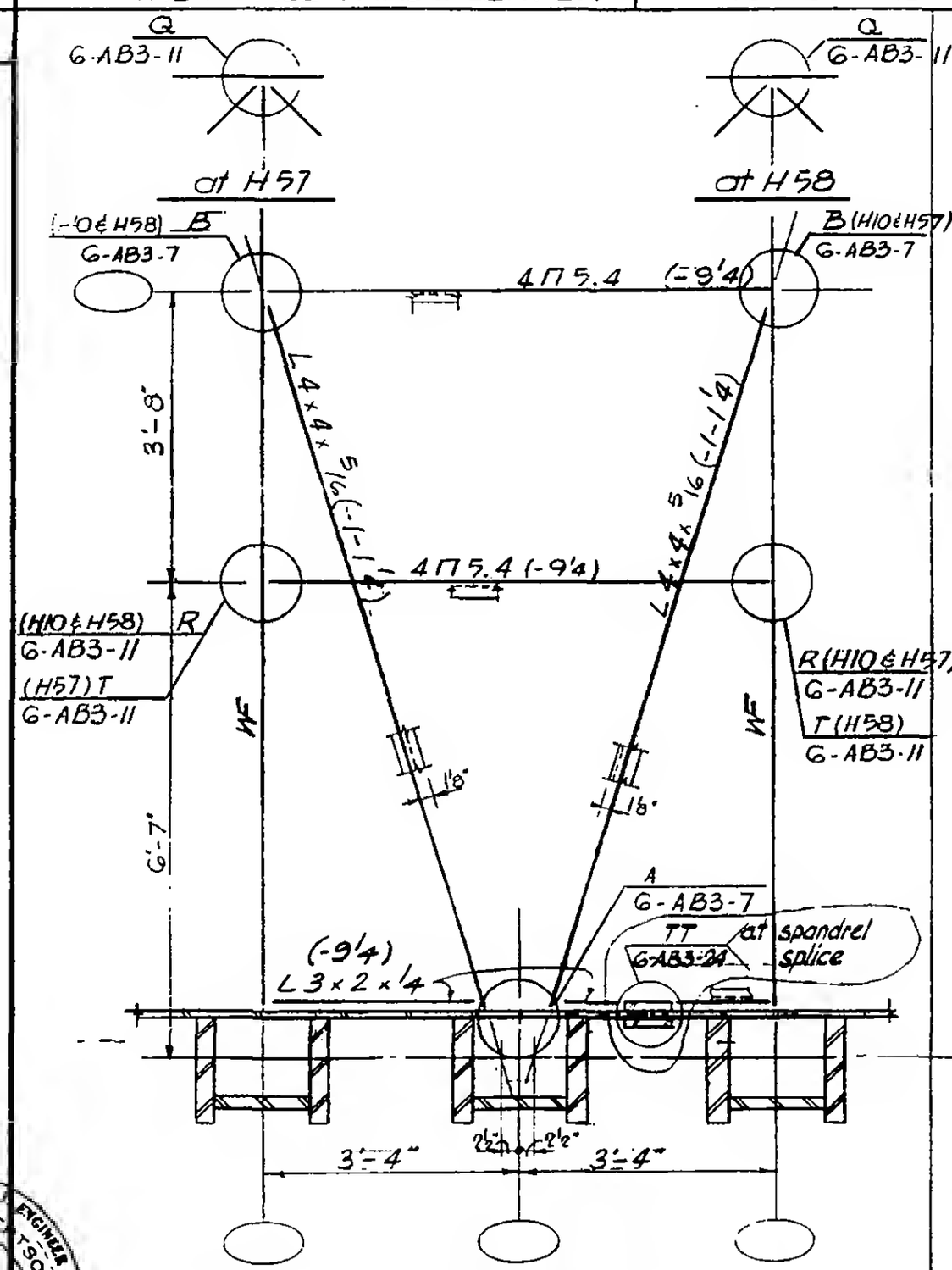

H10

H57 as noted

H58 as noted

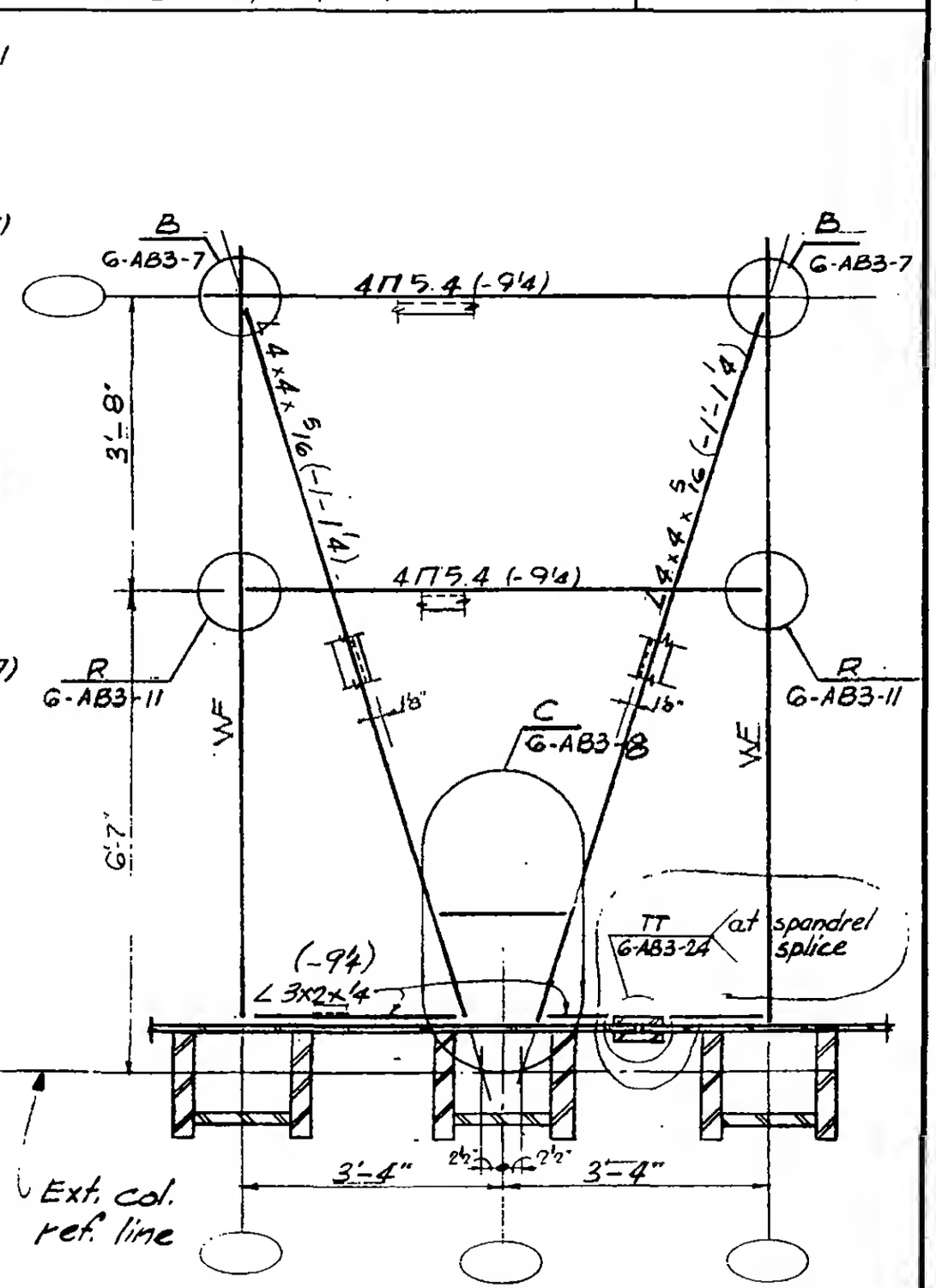

H12

LICENSED PROFESSIONAL ENGINEER
LESLIE E. ROBERTSON
No. 34360
UNIVERSITY OF THE STATE OF NEW YORK

G-AB3-5