WORTHINGTON, SKILLING, HELLE & JACKSON — Civil & Structural Engineers

PROJECT: THE WORLD TRADE CENTER | TITLE: HORIZONTAL TRUSS - DETAILS A & B | DATE: 12-20-67

REVISIONS

Note 1: See approved steel deck shop drawings for locations where this dim. is 7¾".

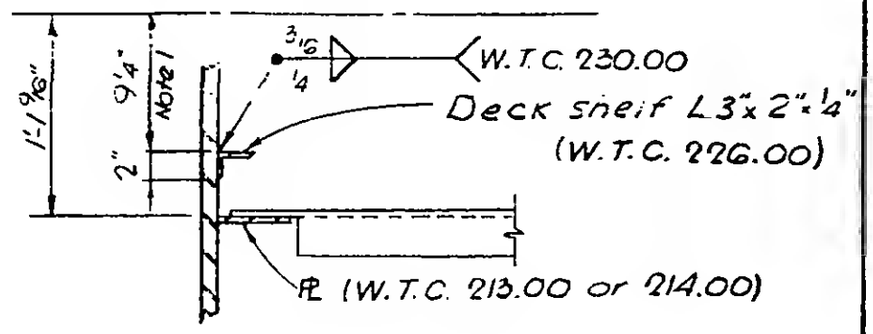

SECTION a-a

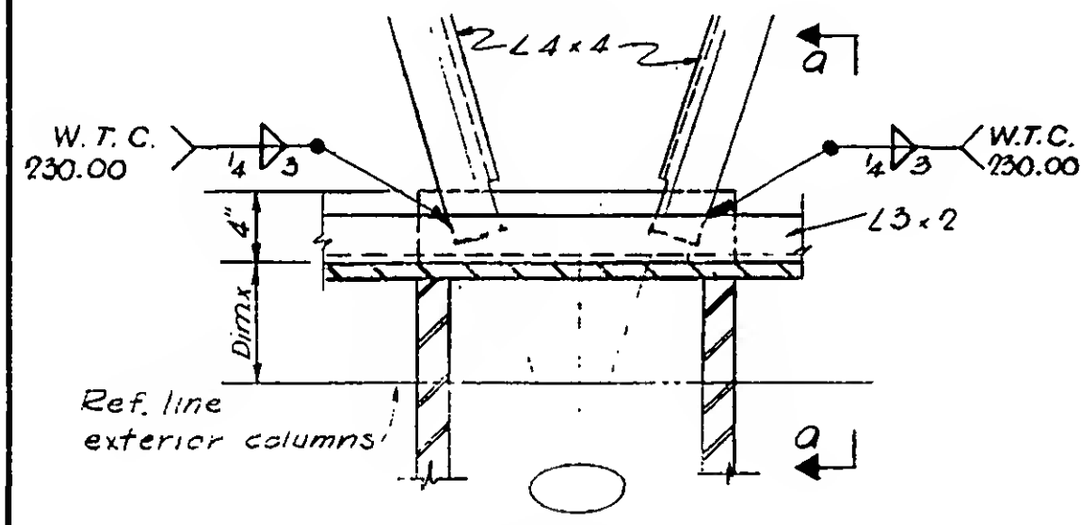

Detail A

Floor	Dim. X
9	7⅞"
41 & 43	7 7/16"
75 & 77	7 1/16"
107	6⅞"

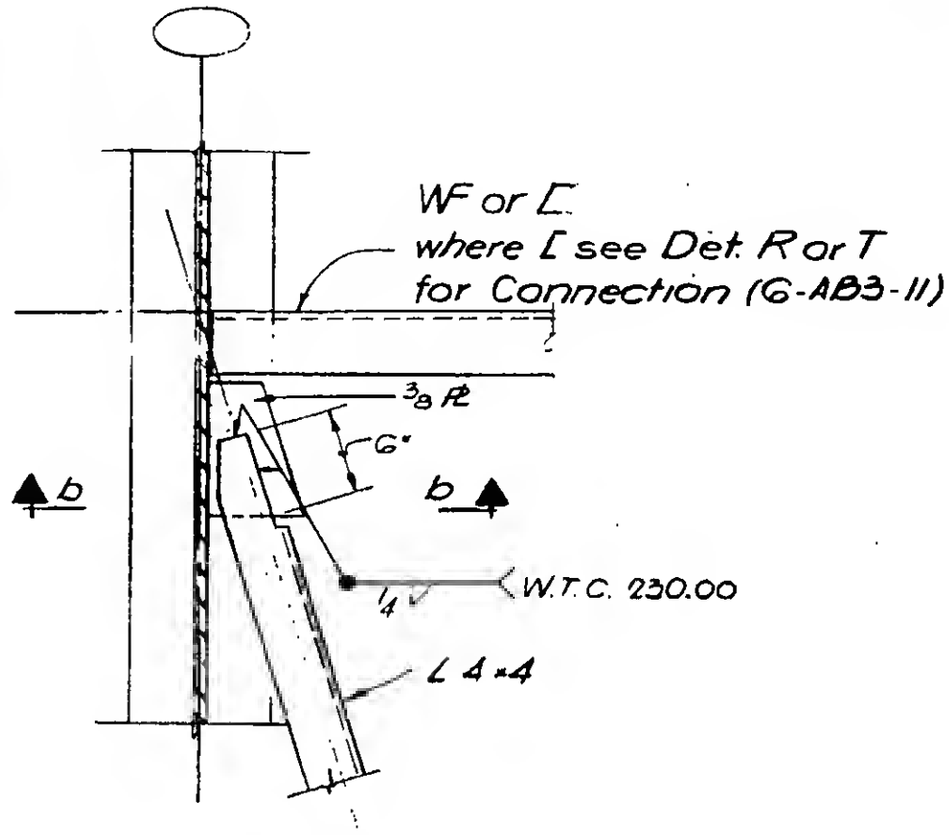

Detail B

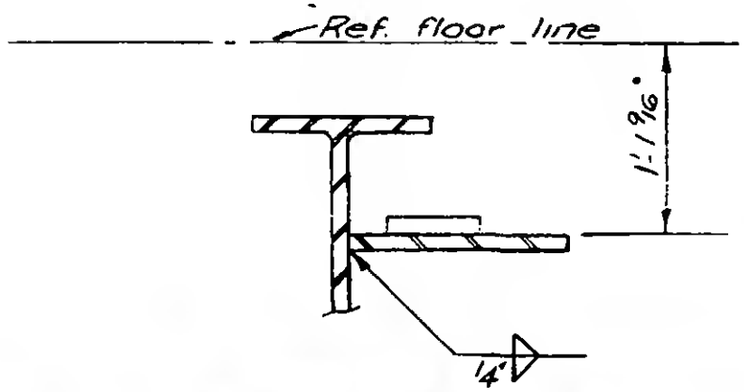

Section b-b

6-AB3-7

LICENSED PROFESSIONAL ENGINEER LESLIE E. ROBERTSON No. 34850 STATE OF NEW YORK