SKILLING - HELLE - CHRISTIANSEN - ROBERTSON Structural & Civil Engineers

PROJECT THE WORLD TRADE CENTER | TITLE HORIZONTAL TRUSS - DETAILS P, Q, R & T | DATE 12-20-67

REVISIONS

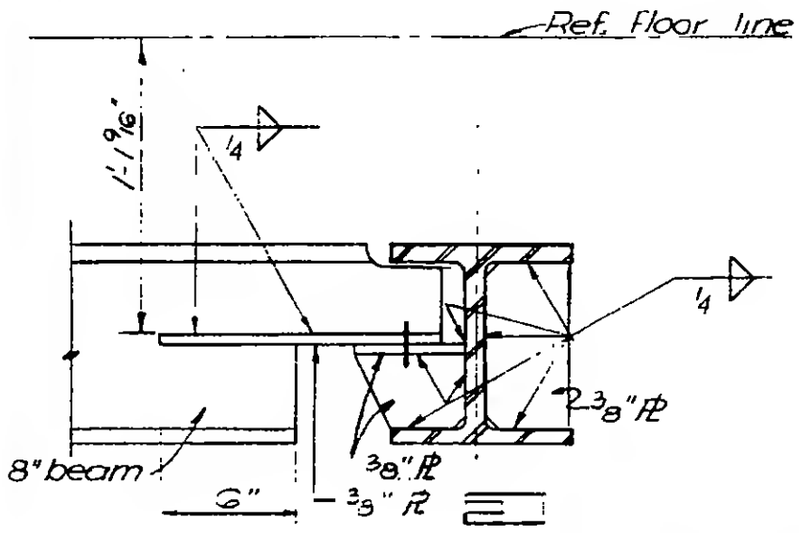

Section a-a

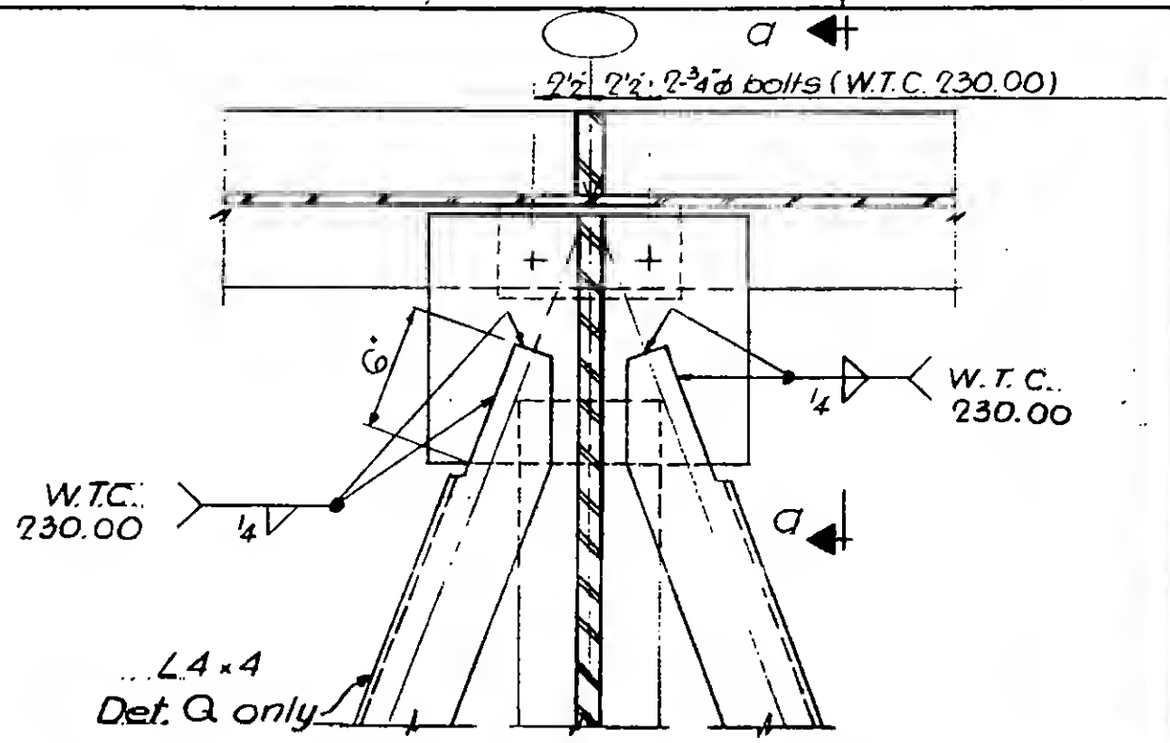

Detail P
Detail Q as noted

Plan

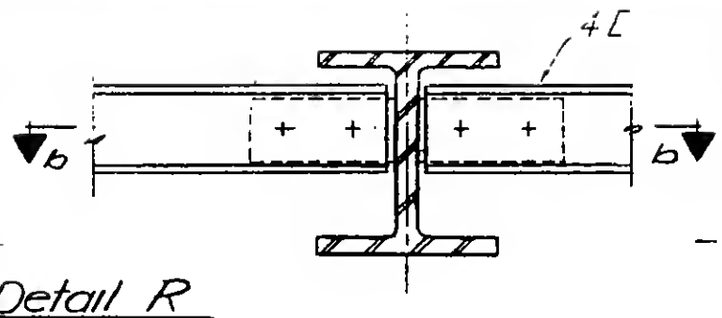

Detail R

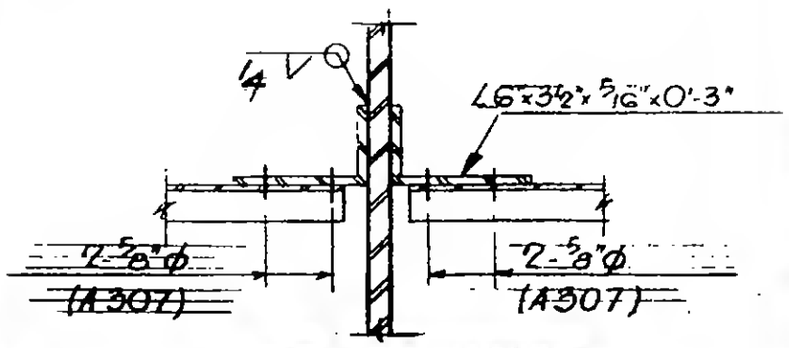

Section b-b

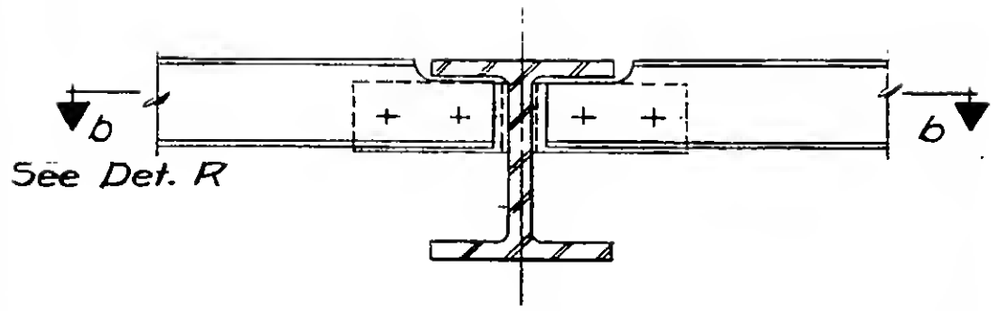

Detail T

LICENSED PROFESSIONAL ENGINEER LESLIE E. ROBERTSON No. 34360 REGISTERED STATE OF NEW YORK

6-AB3-11