SKILLING - HELLE - CHRISTIANSEN - ROBERTSON — Structural & Civil Engineers

PROJECT THE WORLD TRADE CENTER | TITLE HORIZONTAL TRUSS - DETAILS V, W & YY | DATE 12-20-67

REVISIONS

8-29-68

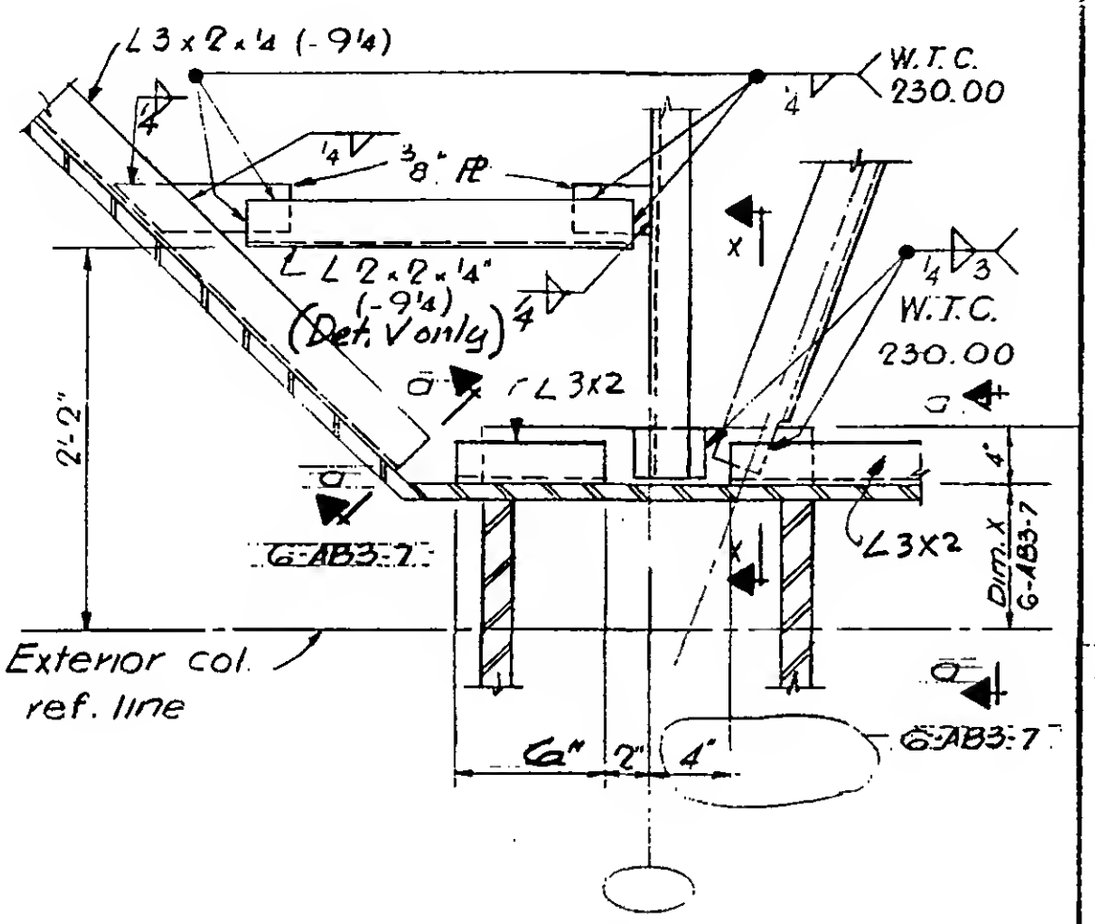

Plan

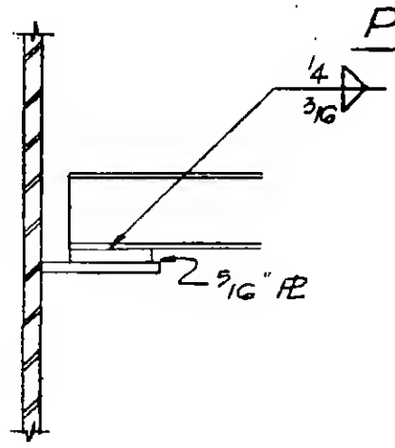

Section X-X

Detail V
Detail VV as noted

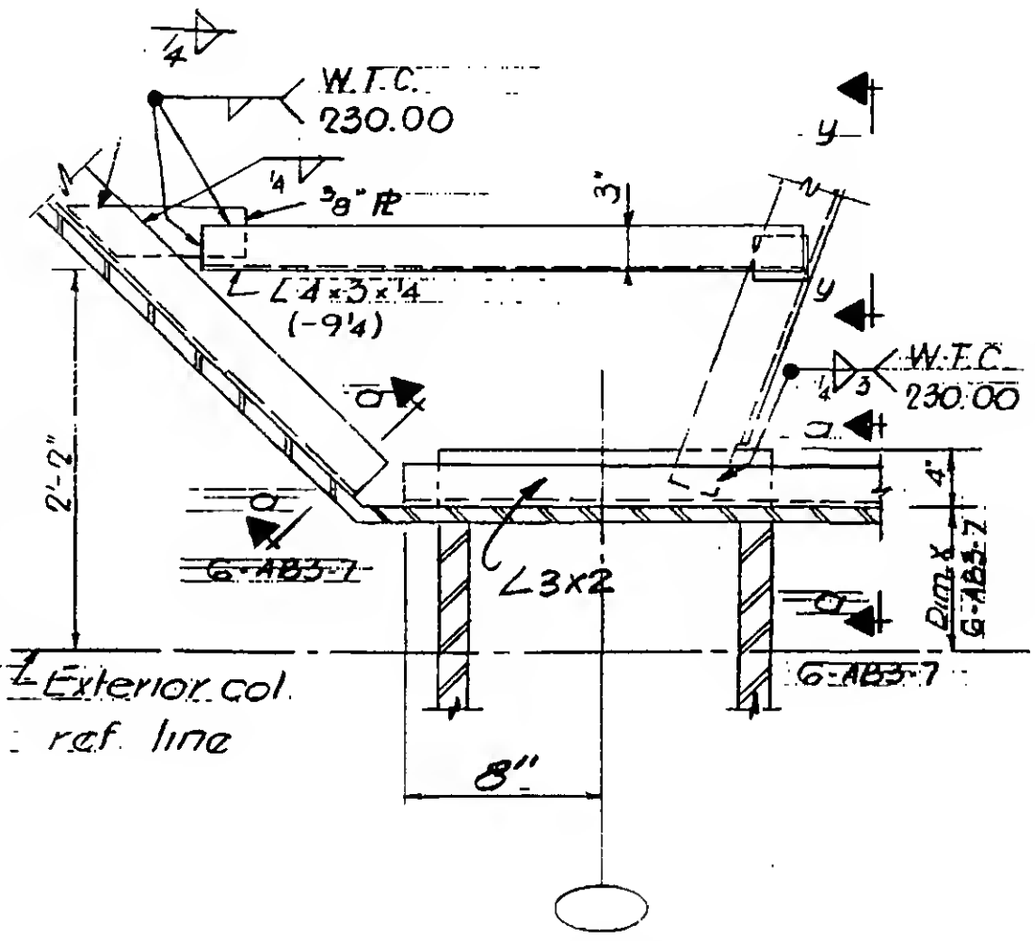

Plan

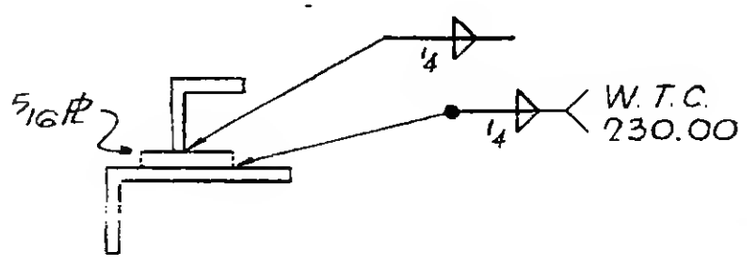

Section y-y

Detail W

G-AB3-11.1

LICENSED PROFESSIONAL ENGINEER
LESLIE E. ROBERTSON
No. 34360
UNIVERSITY OF THE STATE OF NEW YORK