WORTHINGTON, SKILLING, HELLE & JACKSON — Civil & Structural Engineers

PROJECT THE WORLD TRADE CENTER | TITLE HORIZONTAL TRUSS DETAIL AA, BB, CC | DATE 12-20-67

REVISIONS

8-29-68

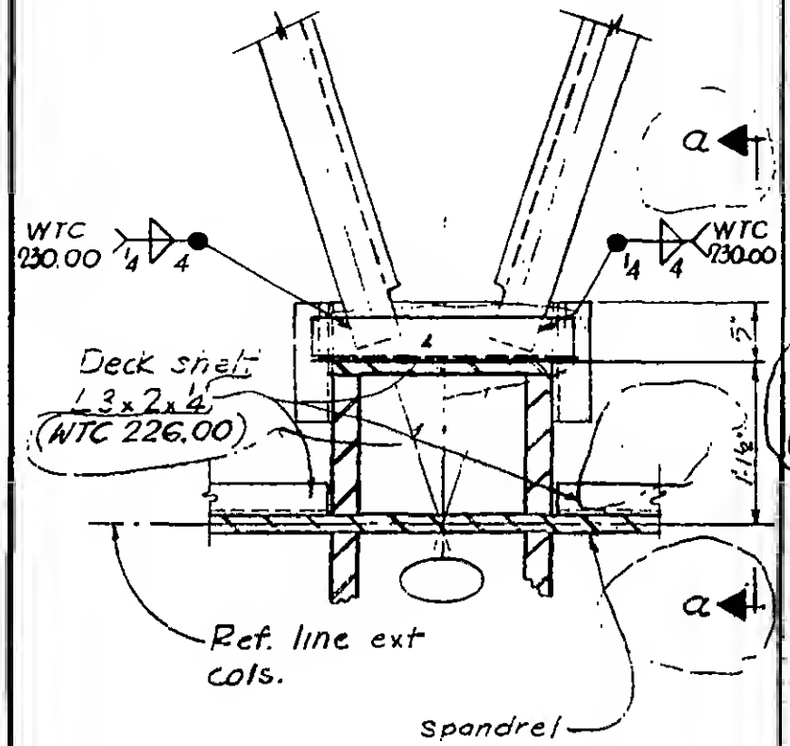

Detail AA

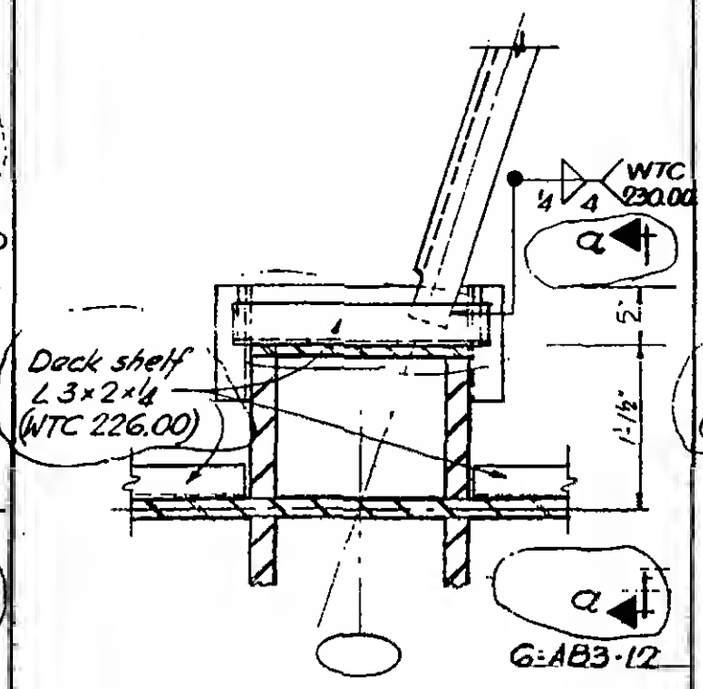

Detail BB

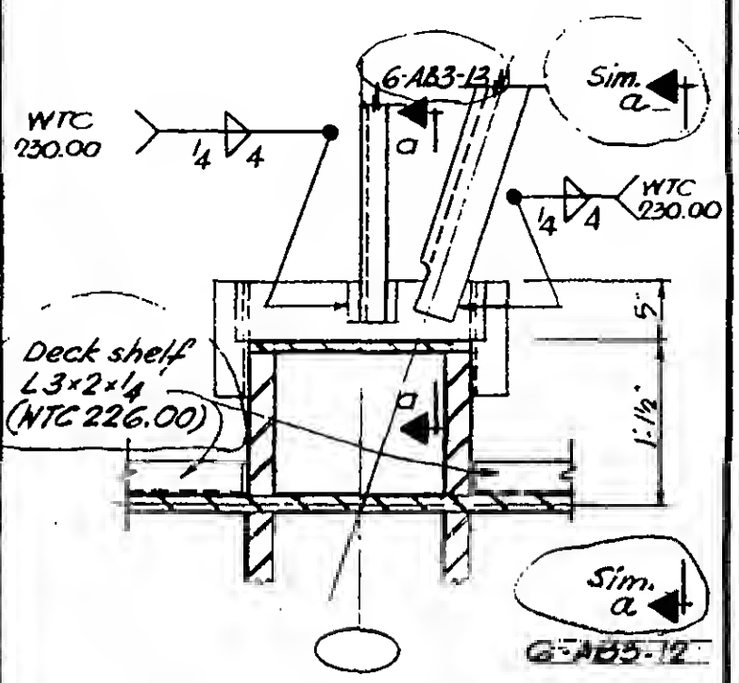

Detail CC

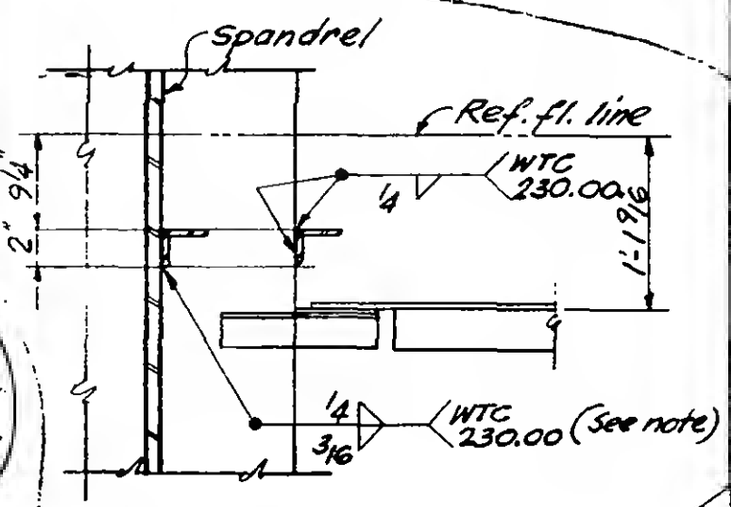

Section a-a

Notes;

1) At spandrel splice for position and weld requirement of deck shelf angle, see Det. UU G-AB3-25

LICENSED PROFESSIONAL ENGINEER LESLIE E. ROBERTSON No. 34360 STATE OF THE STATE OF NEW YORK

G-AB3-12