WORTHINGTON, SKILLING, HELLE & JACKSON — Civil & Structural Engineers

PROJECT: THE WORLD TRADE CENTER | TITLE: HORIZONTAL TRUSSES H20, H21, H22 H54, H55, H56 | DATE: 12-20-67

REVISIONS

8-29-68

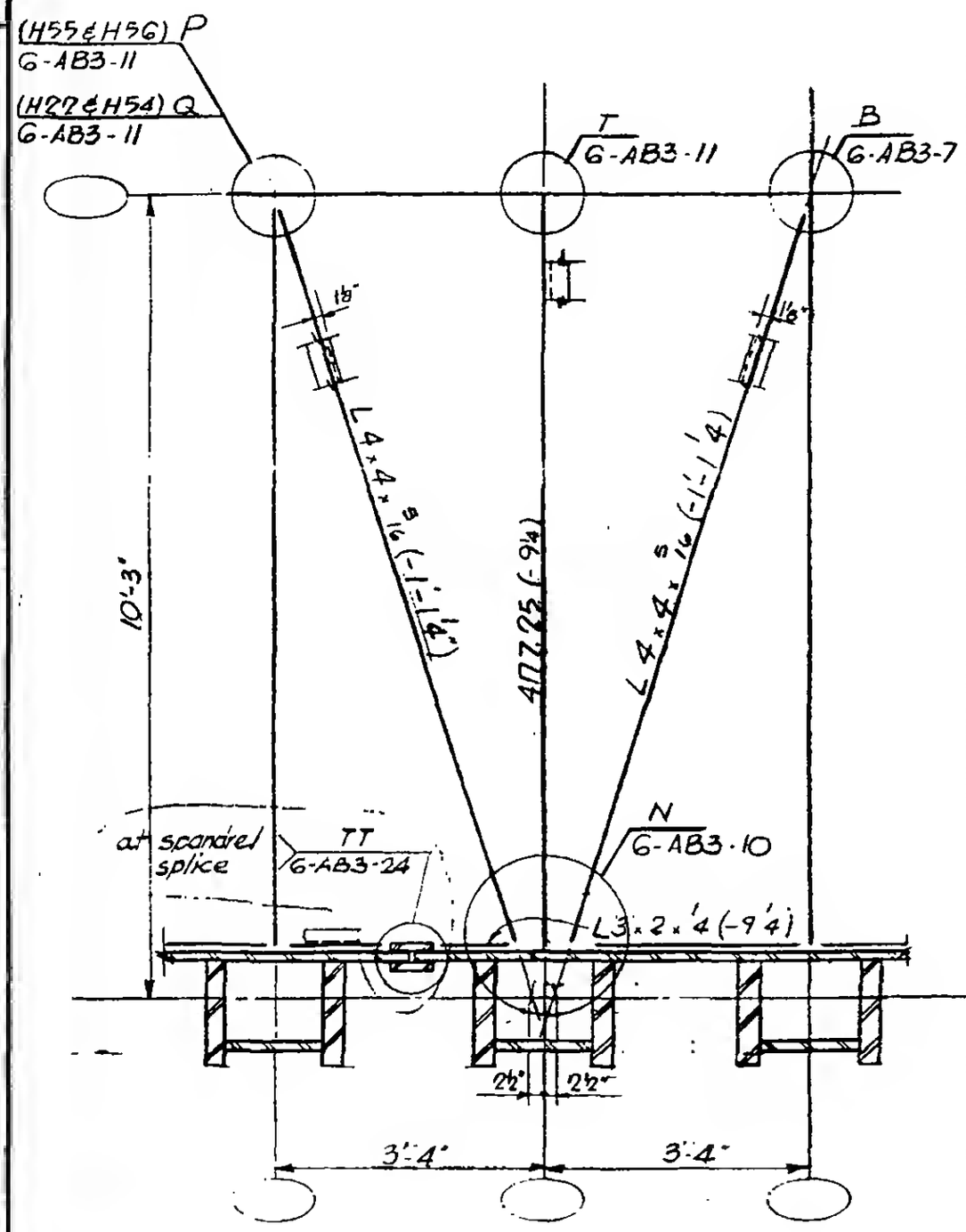

H22
H54 opp. hand
H55 as noted
H56 opp. hand as noted

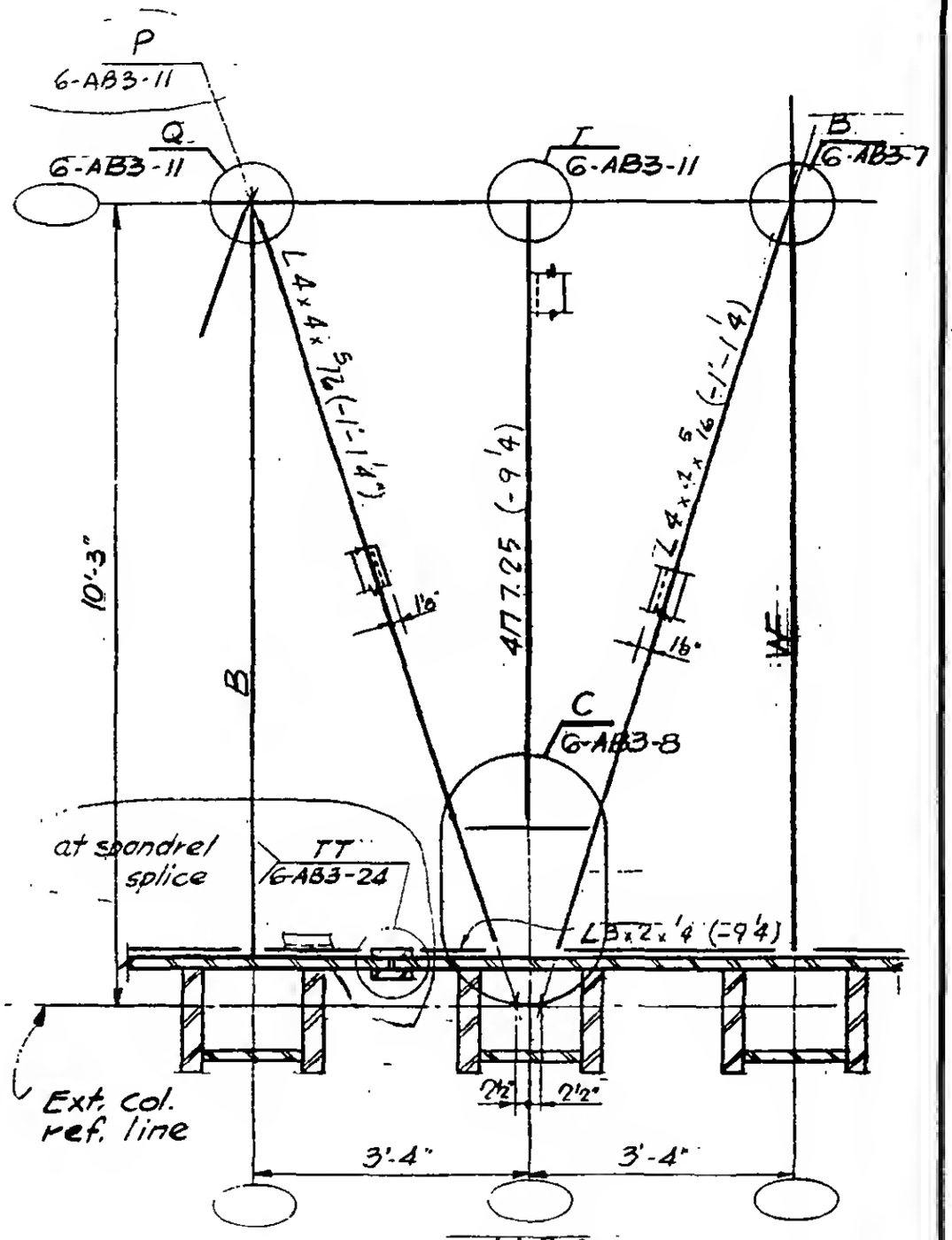

H20
H21 Opp hand

LICENSED PROFESSIONAL ENGINEER
LESLIE E. ROBERTSON
No. 34360
STATE OF THE STATE OF NY

G-AB3-14