SKILLING - HELLE - CHRISTIANSEN - ROBERTSON Structural & Civil Engineers

PROJECT THE WORLD TRADE CENTER | TITLE HORIZONTAL TRUSSES H30; H34, H35, H36 & H37 | DATE 12-20-67

REVISIONS

8-29-68

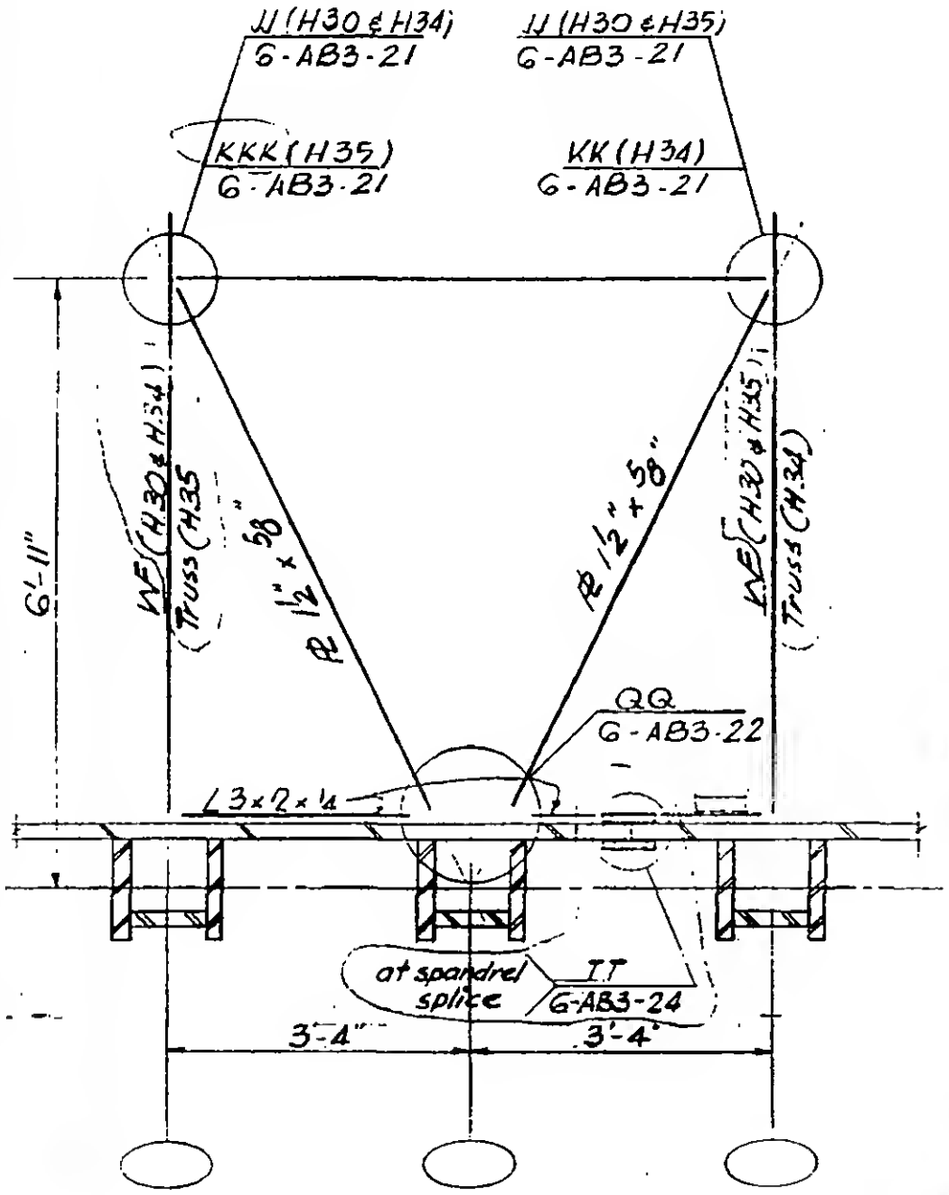

H30
H34
H35

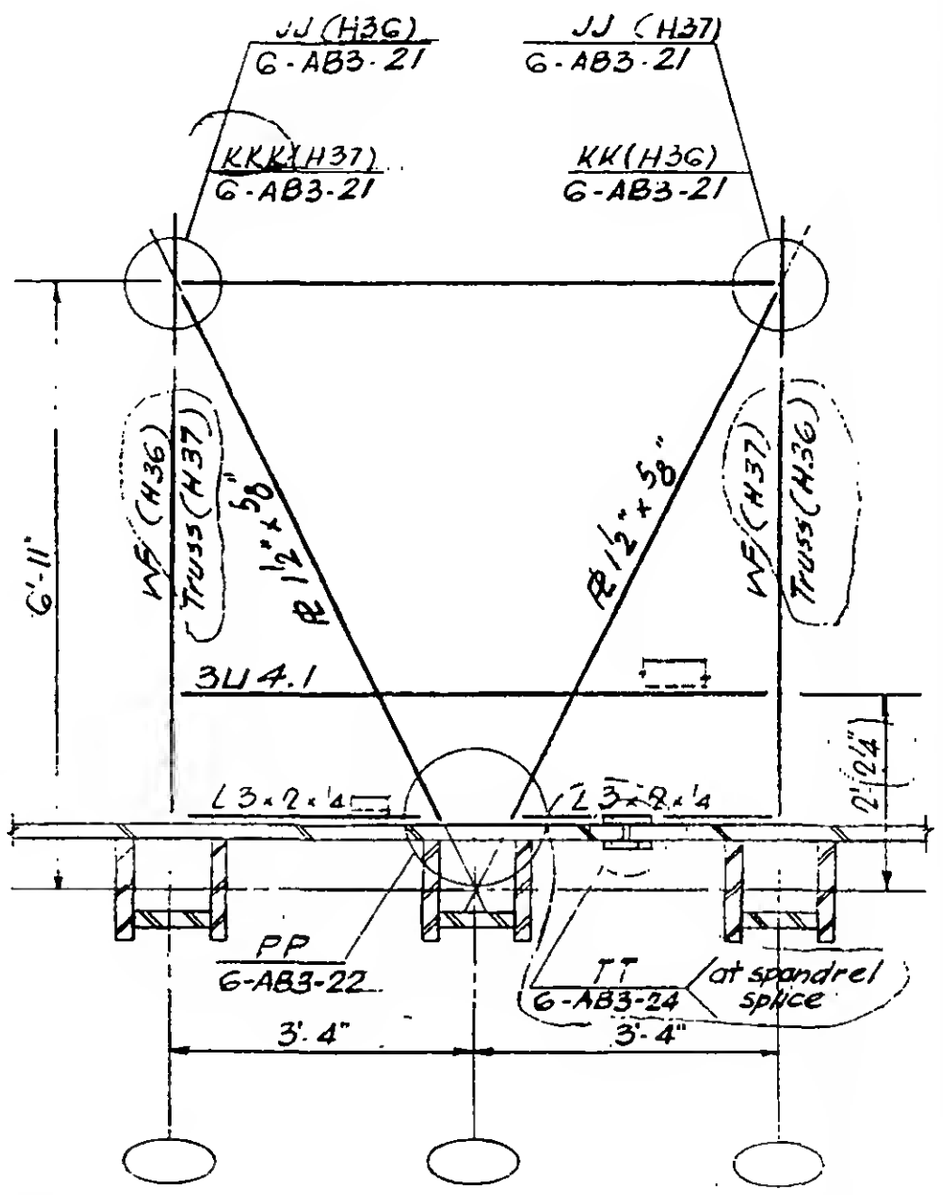

H36
H37

LICENSED PROFESSIONAL ENGINEER
LESLIE E. ROBERTSON
No. 3436
STATE OF THE STATE OF NEW YORK

G-AB3-18