SKILLING - HELLE - CHRISTIANSEN - ROBERTSON Structural & Civil Engineers

PROJECT THE WORLD TRADE CENTER | TITLE HORIZONTAL TRUSS-DETAILS HH, JJ, KK, LL, KKK, LLL | DATE 12-20-67

REVISIONS

8-29-68

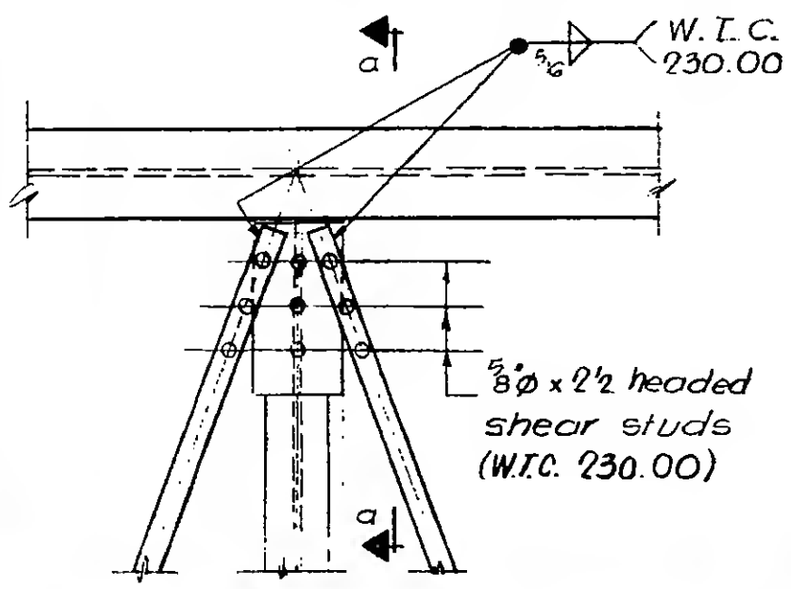

Plan

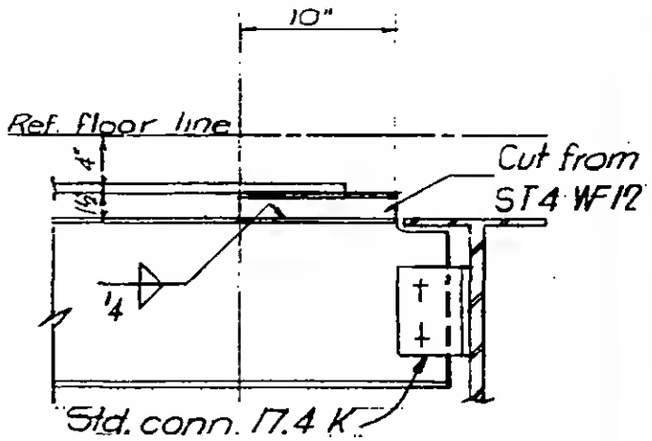

Section a-a

Detail HH

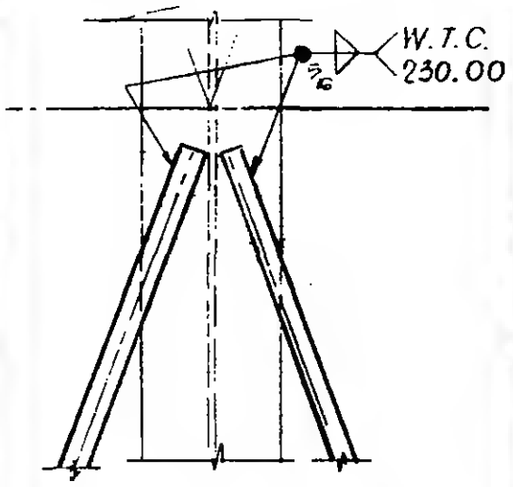

Detail JJ

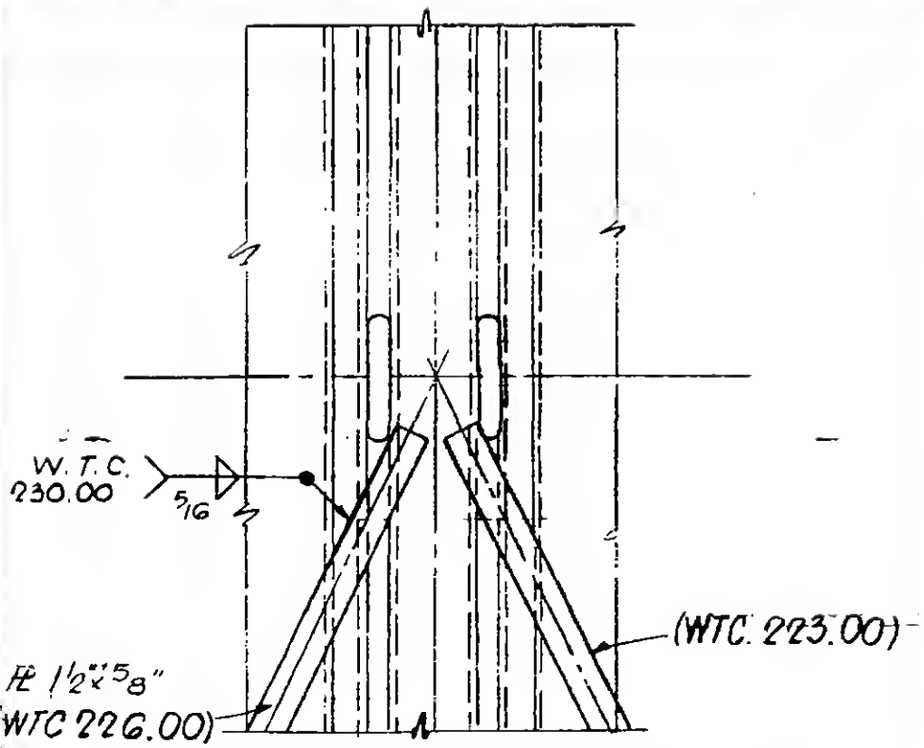

Detail KK (as shown
Detail KKK (opp. hand)

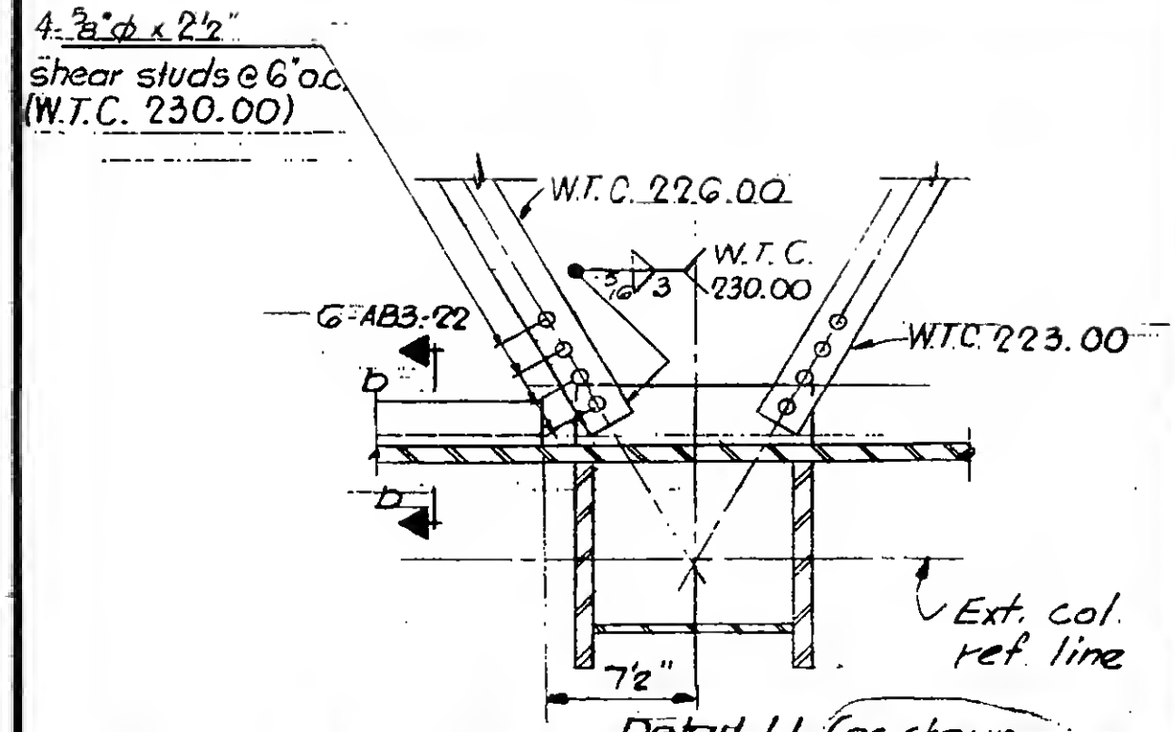

Detail LL (as shown
Detail LLL (opp hand)

G-AB3-2L

LICENSED PROFESSIONAL ENGINEER
LESLIE E. ROBERTSON
34360
STATE OF NEW YORK