SKILLING - HELLE - CHRISTIANSEN - ROBERTSON Structural & Civil Engineers

PROJECT THE WORLD TRADE CENTER | TITLE HORIZONTAL TRUSS - DETAILS PP & QQ | DATE 12-20-67

REVISIONS

8-29-68

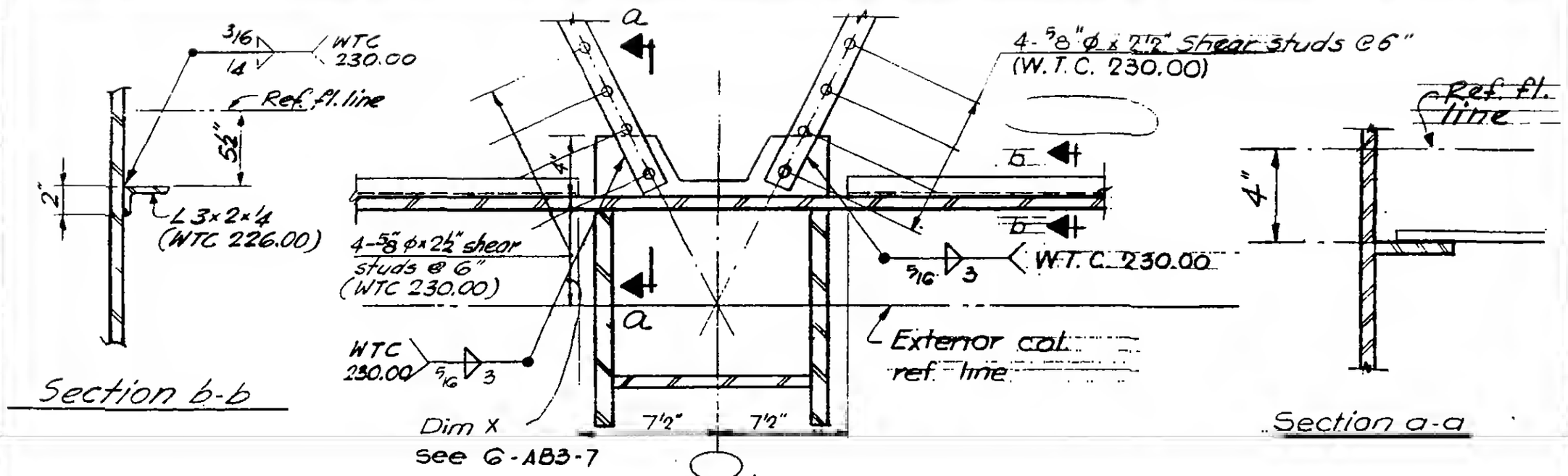

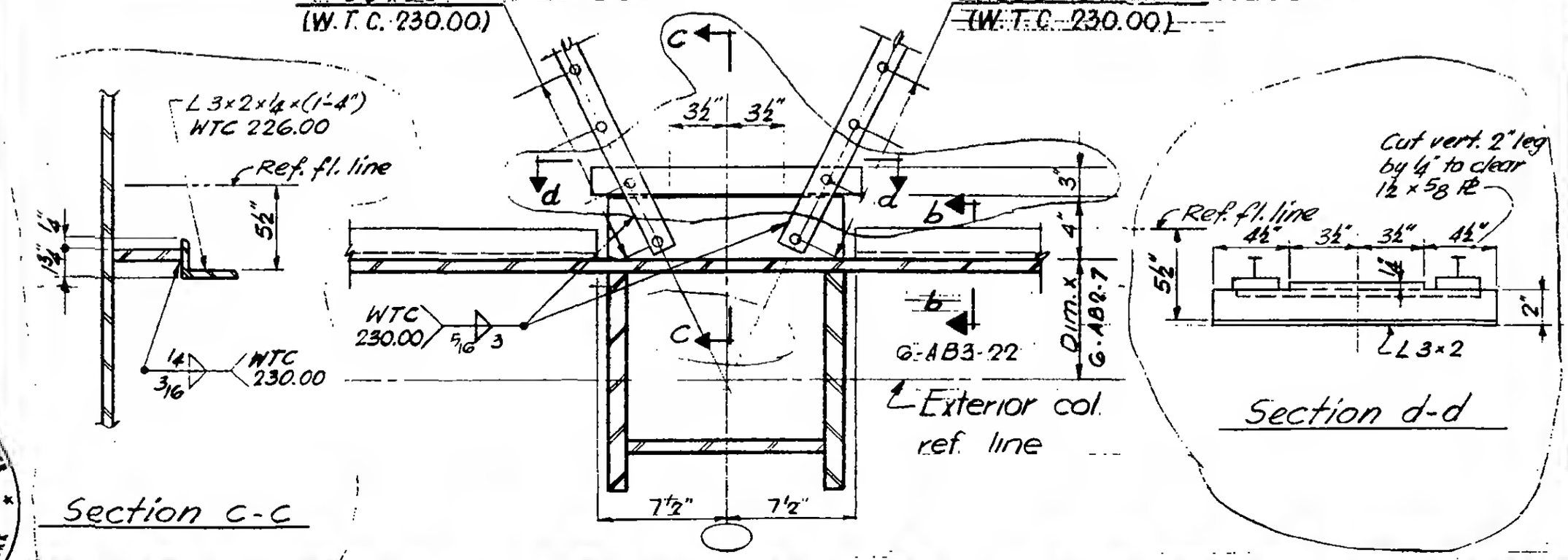

LICENSED PROFESSIONAL ENGINEER LESLIE E. ROBERTSON No. 34360 STATE OF NEW YORK

G-AB3-22