SKILLING, HELLE, CHRISTIANSEN, ROBERTSON — Structural & Civil Engineers

PROJECT THE WORLD TRADE CENTER | TITLE HORIZONTAL TRUSS - DETAIL UU & WW | DATE 8-29-68

REVISIONS

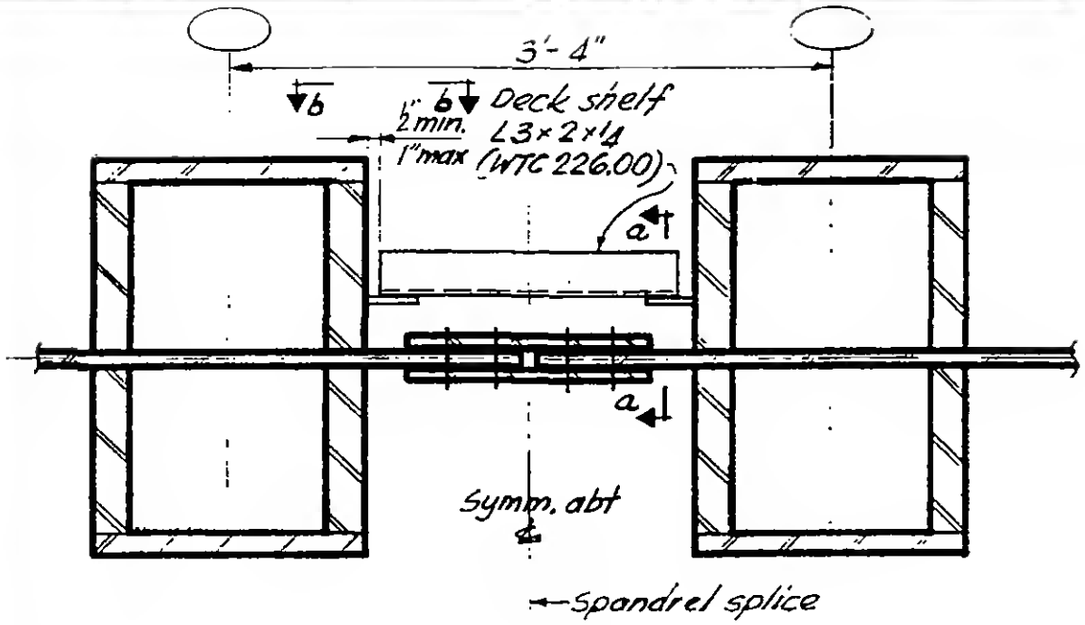

Plan

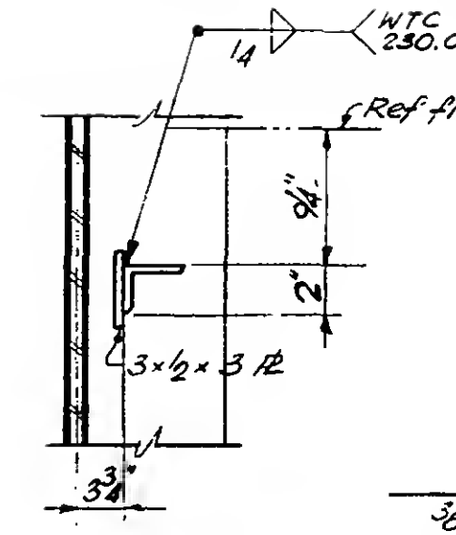

Section a-a

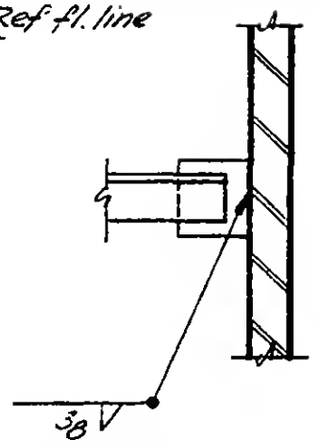

Section b-b

Detail UU

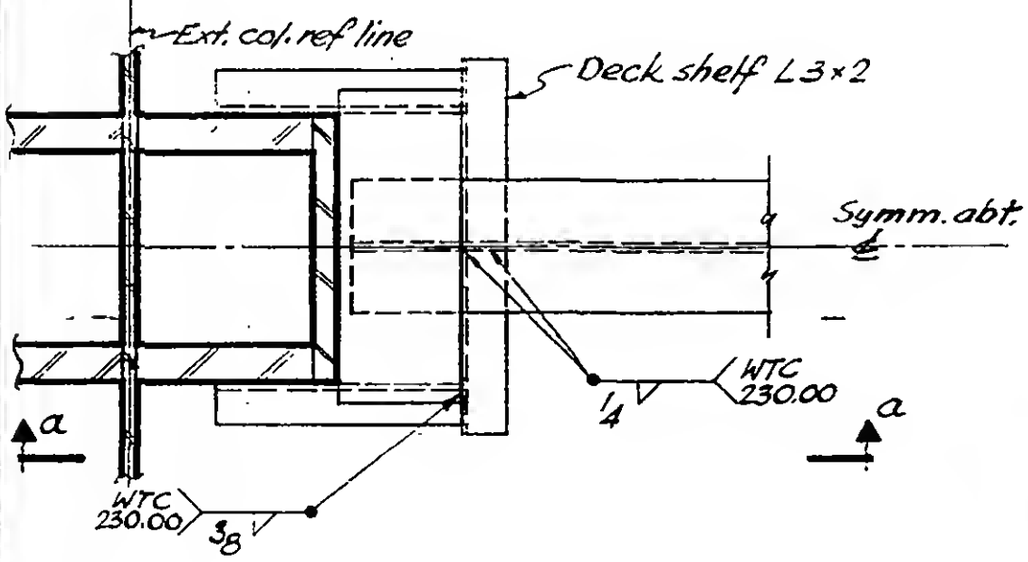

Plan

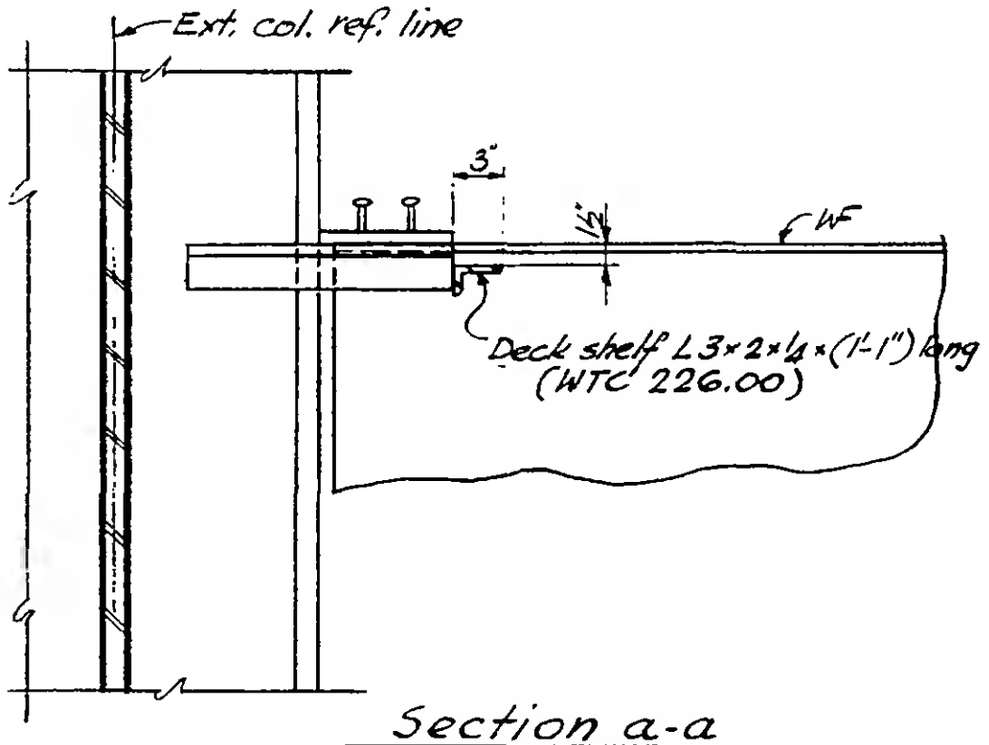

Section a-a

Note: Det. WW to be used in conjunction with Details 6-AB2-55 & 6-AB2-56

Detail WW

DESIGNED

DRAWN

REVIEWED

6-AB3-25