WORTHINGTON, SKILLING, HELLE & JACKSON — Civil & Structural Engineers

PROJECT THE WORLD TRADE CENTER | TITLE BEAM FLOOR BRIDGING TYPES B1 THRU B4 | DATE 12-20-67

REVISIONS

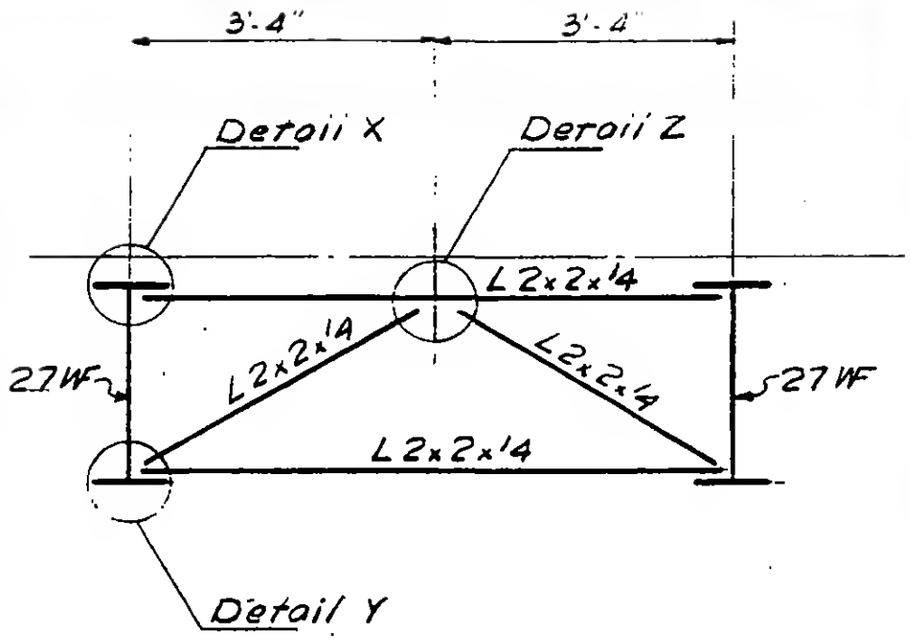

B1

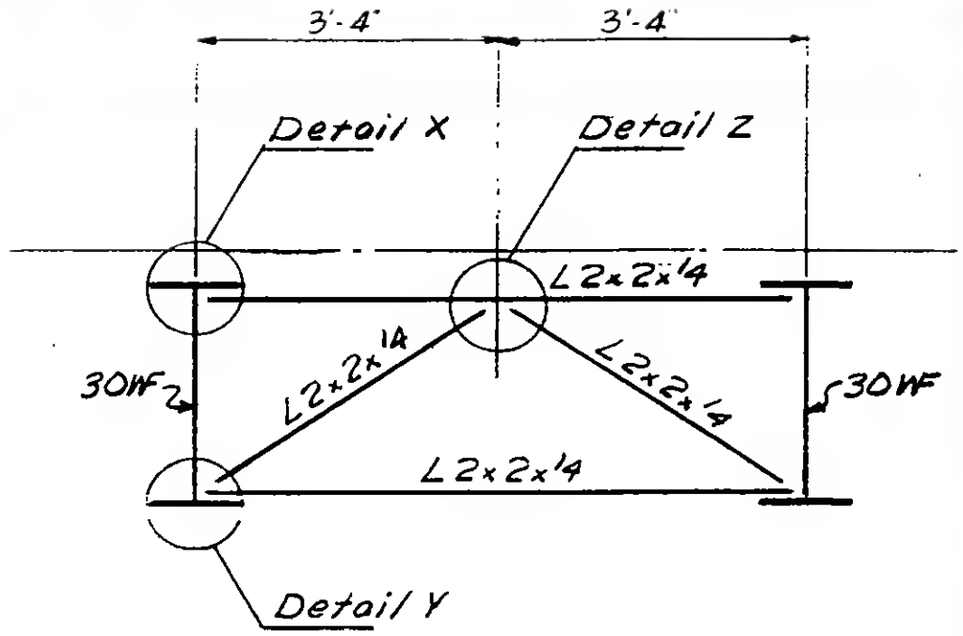

B2

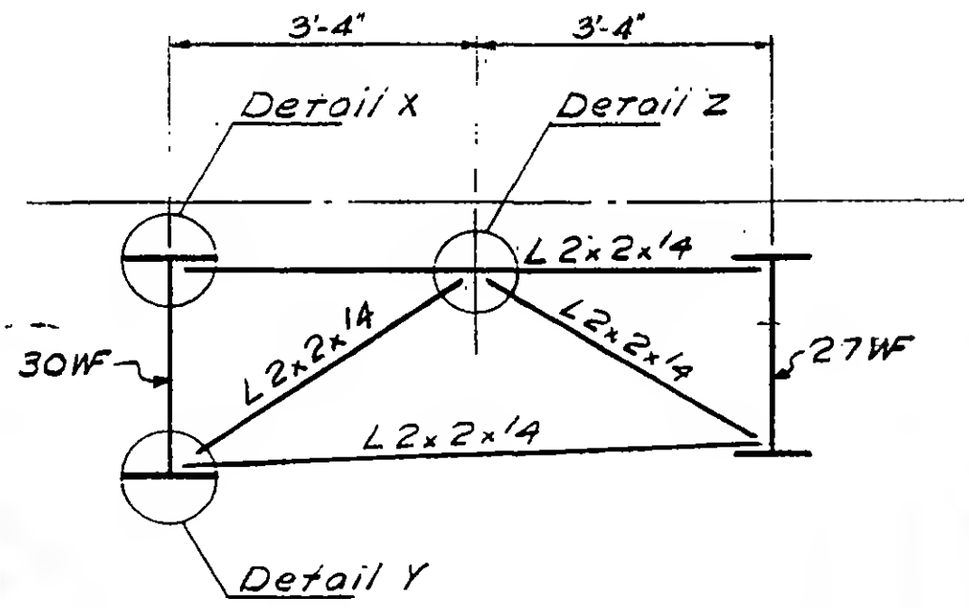

B3

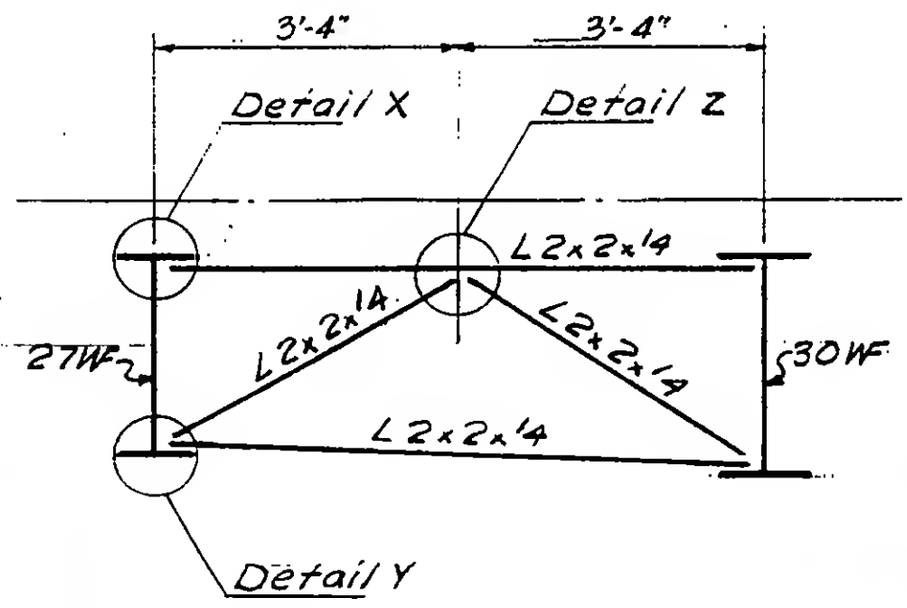

B4

LICENSED PROFESSIONAL ENGINEER
LESLIE E. ROBERTSON
No. 34360
CITY OF THE STATE OF NEW YORK

G-AB3-30