WORTHINGTON, SKILLING, HELLE & JACKSON — Civil & Structural Engineers

PROJECT THE WORLD TRADE CENTER | TITLE BEAM FLOOR BRIDGING TYPES B5 THRU B8 | DATE 12-20-67

REVISIONS

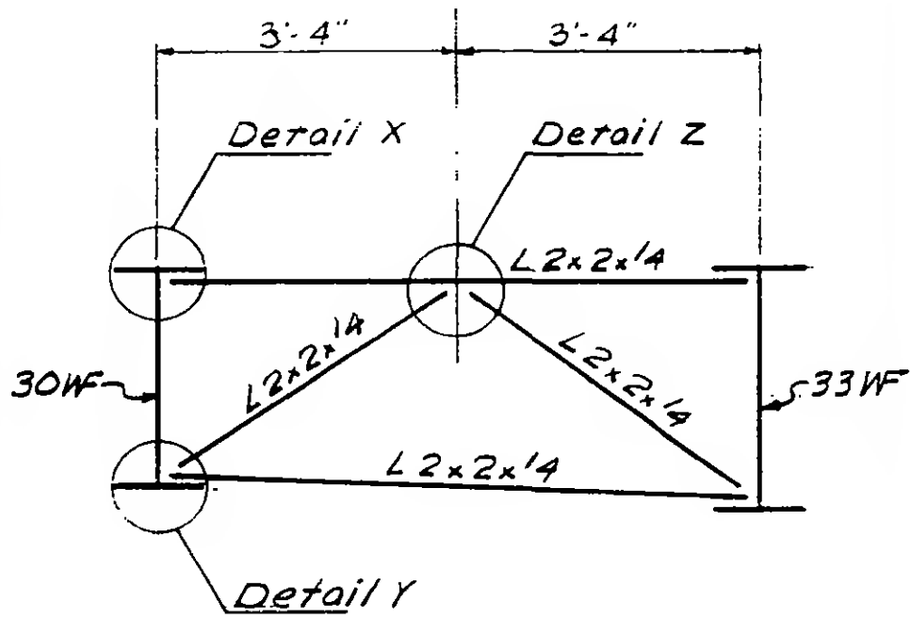

B5

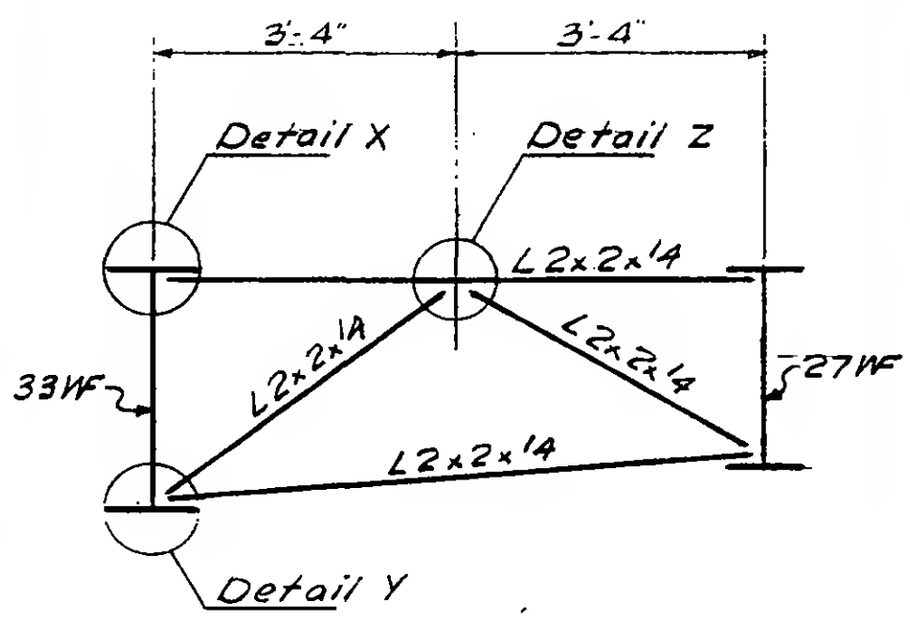

B6

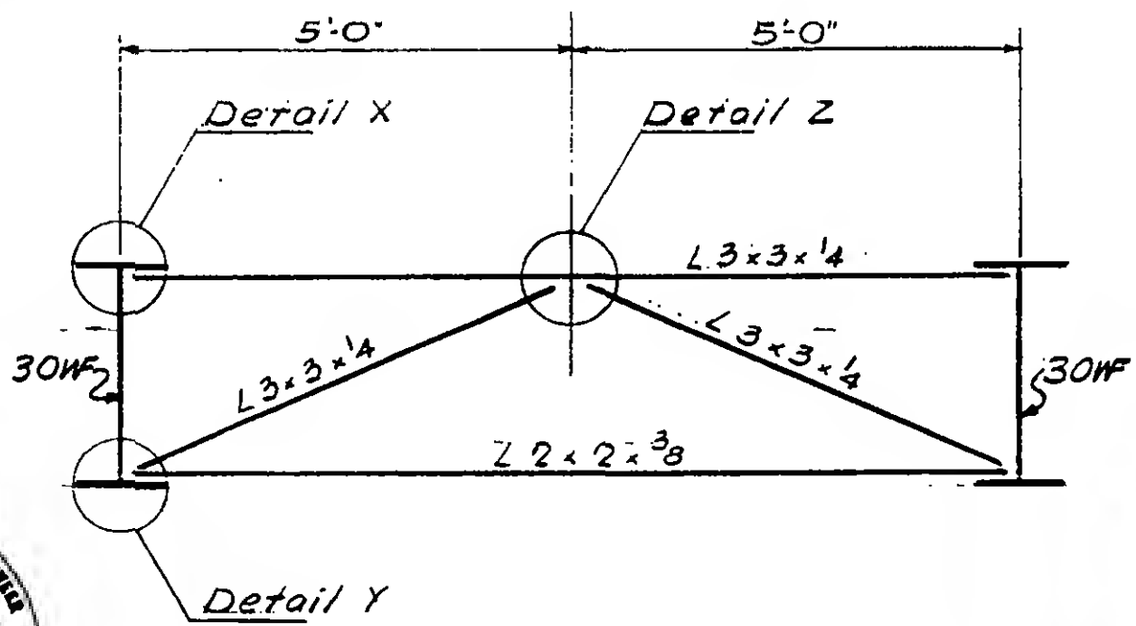

B7

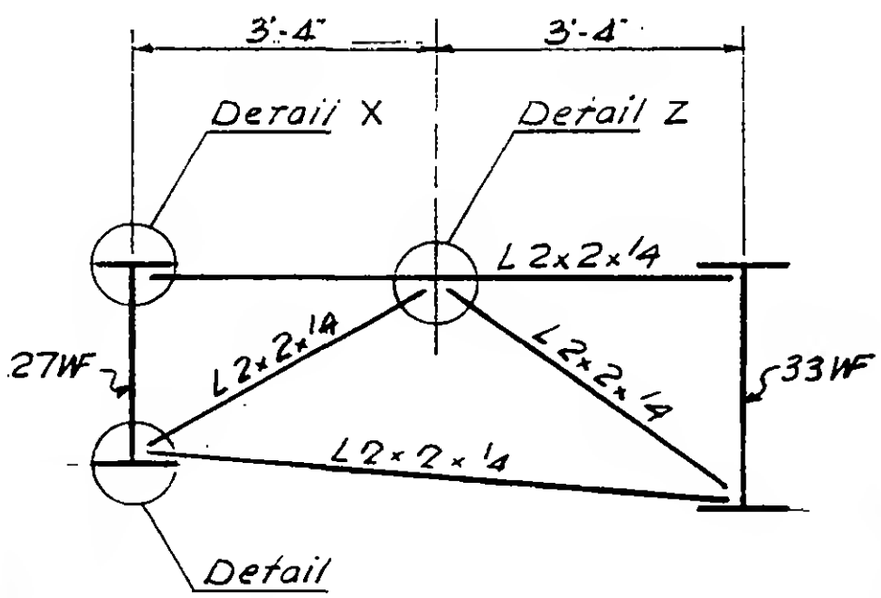

B8

LICENSED PROFESSIONAL ENGINEER
LESLIE E. ROBERTSON
No. 34360
STATE OF NEW YORK

6-AB3-31