WORTHINGTON, SKILLING, HELLE & JACKSON — Civil & Structural Engineers

PROJECT THE WORLD TRADE CENTER | TITLE BEAM FLOOR BRIDGING TYPES B9 THRU B12 | DATE 12-20-67

REVISIONS

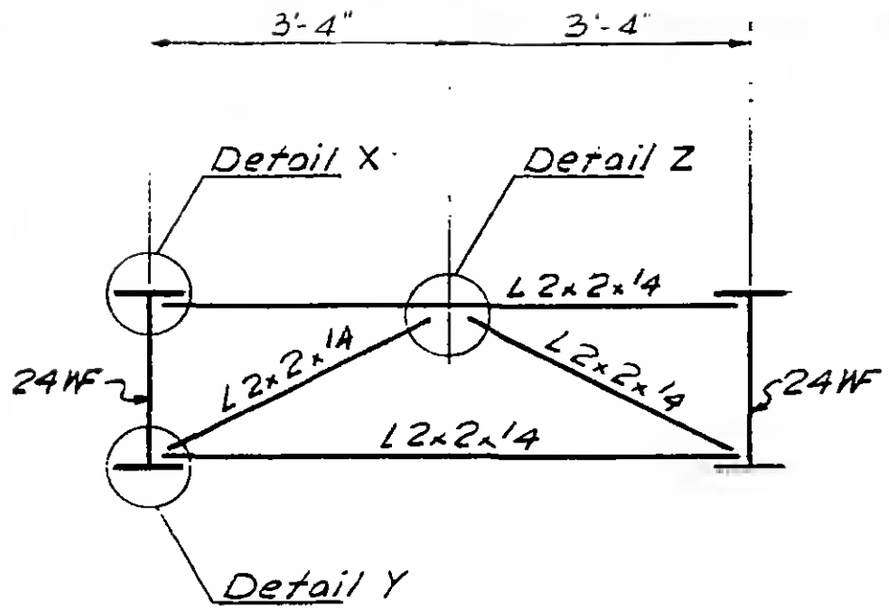

B9

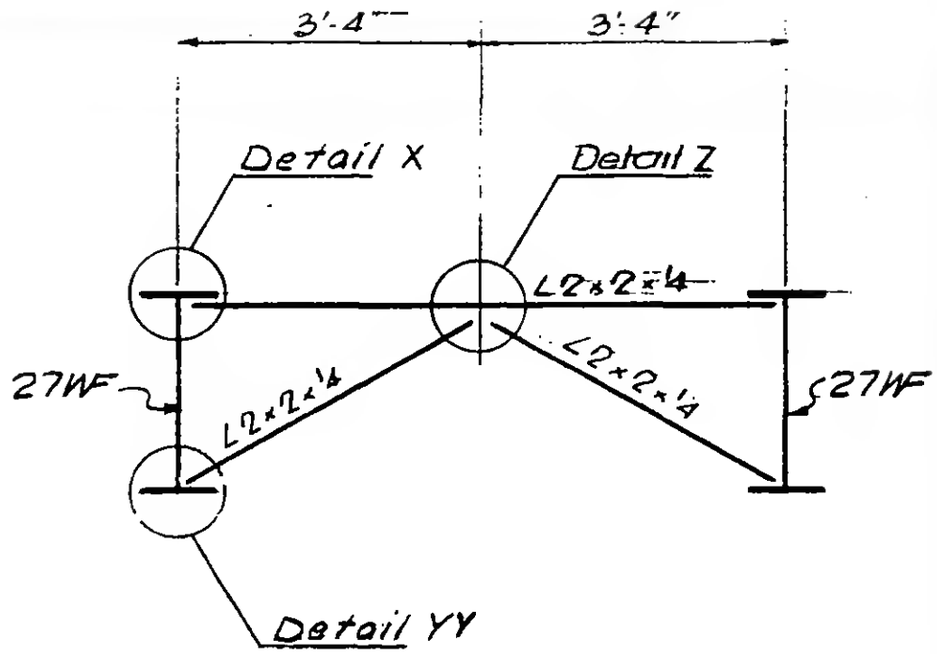

B10

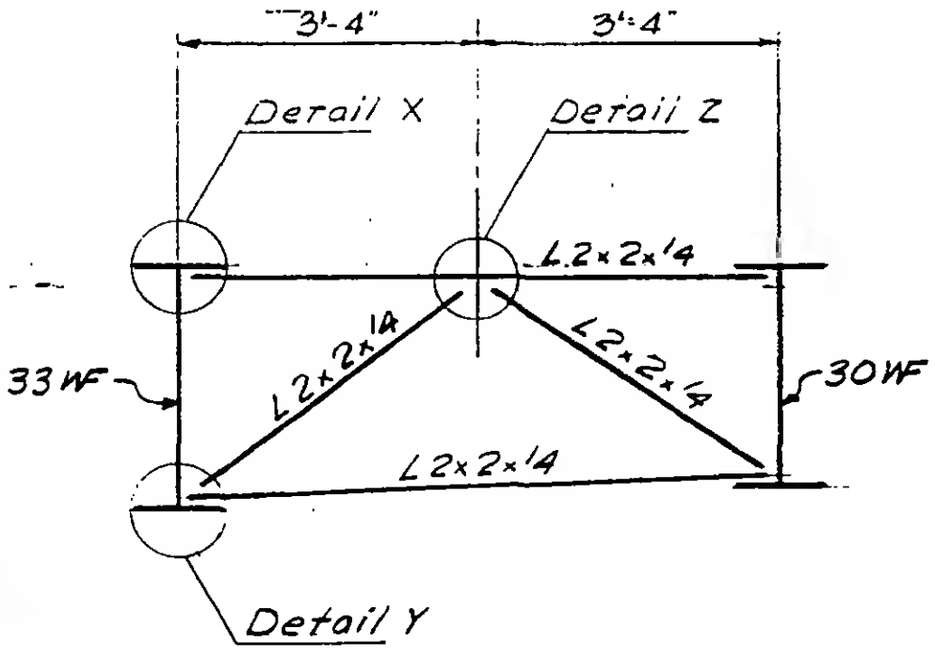

B11

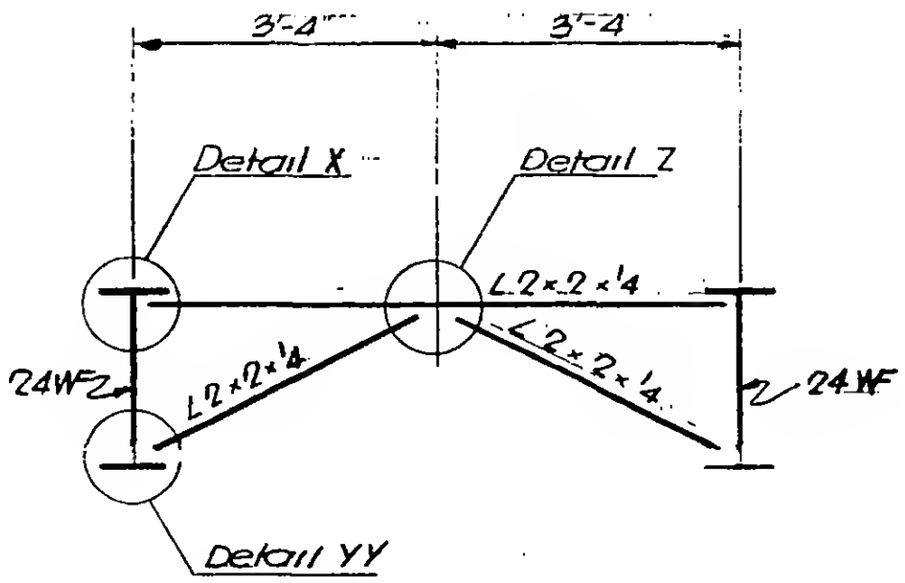

B12

G-AB3-32

LEWIS E. ROBERTSON No. 34240 LICENSED PROFESSIONAL ENGINEER STATE OF NEW YORK