WORTHINGTON, SKILLING, HELLE & JACKSON — Civil & Structural Engineers

PROJECT THE WORLD TRADE CENTER | TITLE BEAM FLOOR BRIDGING DETAILS | DATE 12-20-67

REVISIONS

-24-68

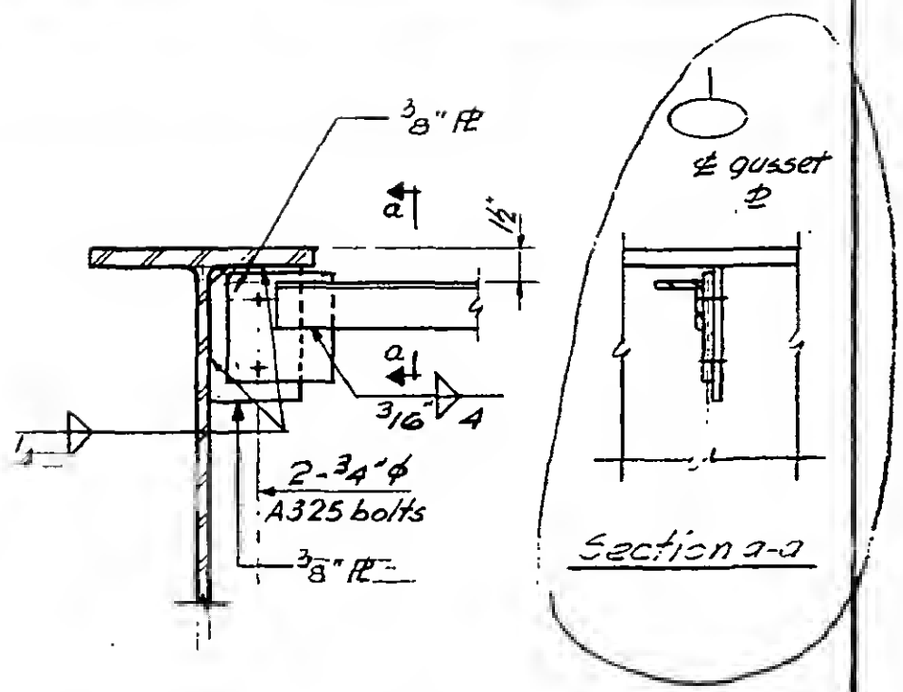

DETAIL X

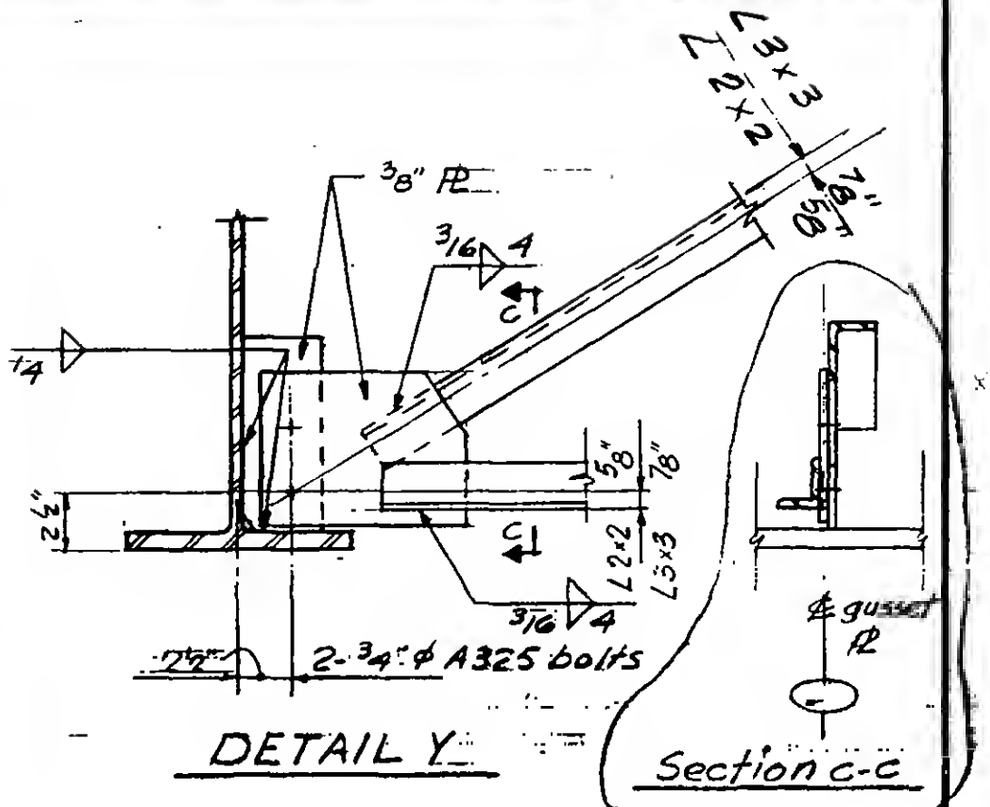

DETAIL Y

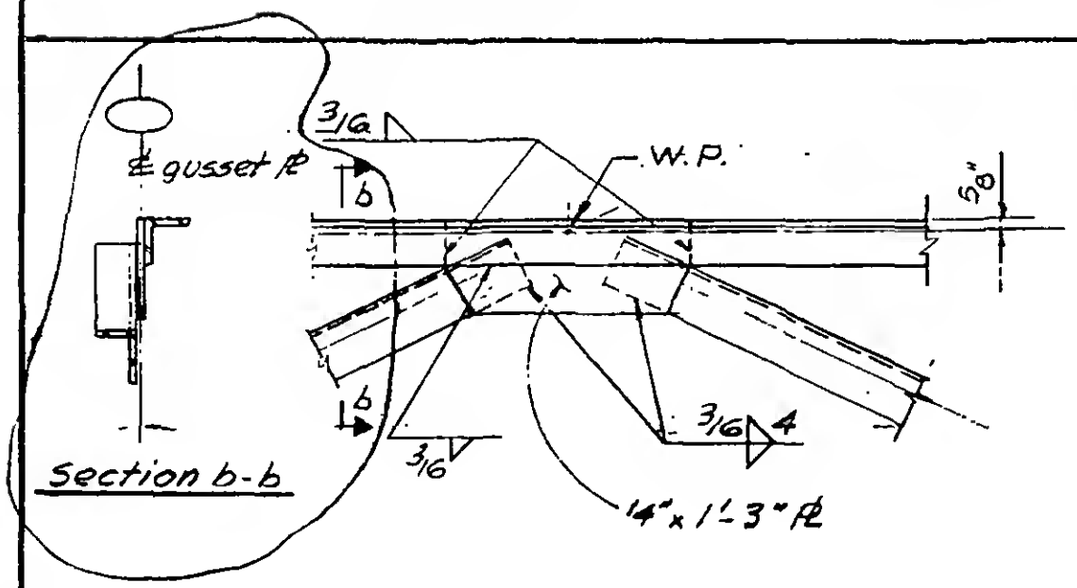

DETAIL Z

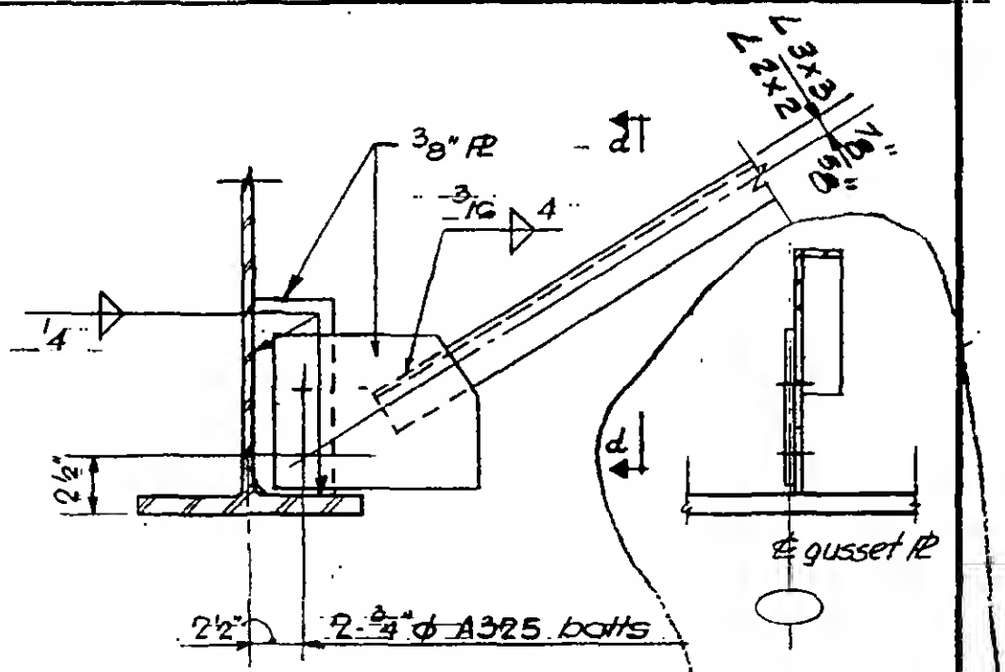

DETAIL YY

LICENSED PROFESSIONAL ENGINEER
LESLIE E. ROBERTSON
No. 34360
STATE OF NEW YORK

C-AB3-35