SKILLING, HELLE, CHRISTIANSEN, ROBERTSON — Structural & Civil Engineers

PROJECT THE WORLD TRADE CENTER | TITLE HORIZONTAL TRUSSES H 11 & H 13 | DATE 8-17-68

REVISIONS

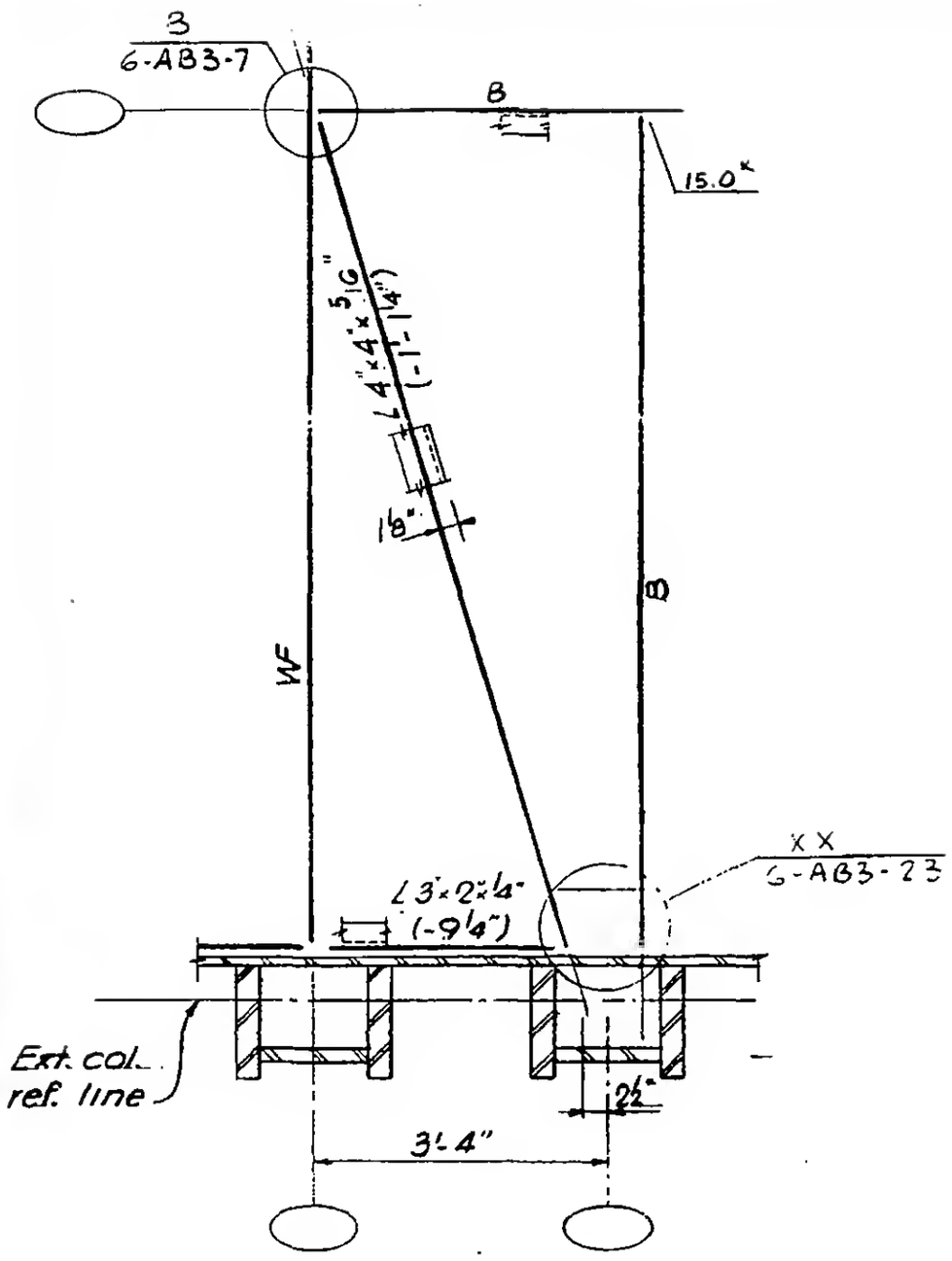

H 11

H 13 opp. hand

LICENSED PROFESSIONAL ENGINEER — LESLIE E. ROBERTSON — No. 34360 — REGISTERED IN THE STATE OF NEW YORK

DESIGNED

DRAWN

REVIEWED

6-AB3-34