SKILLING - HELLE - CHRISTIANSEN - ROBERTSON Structural & Civil Engineers

PROJECT THE WORED TRADE CENTER | TITLE LOUVER SUPPORTS - DETAILS A & B | DATE 12-20-67

REVISIONS

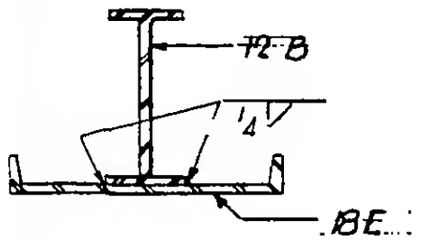

Detail A

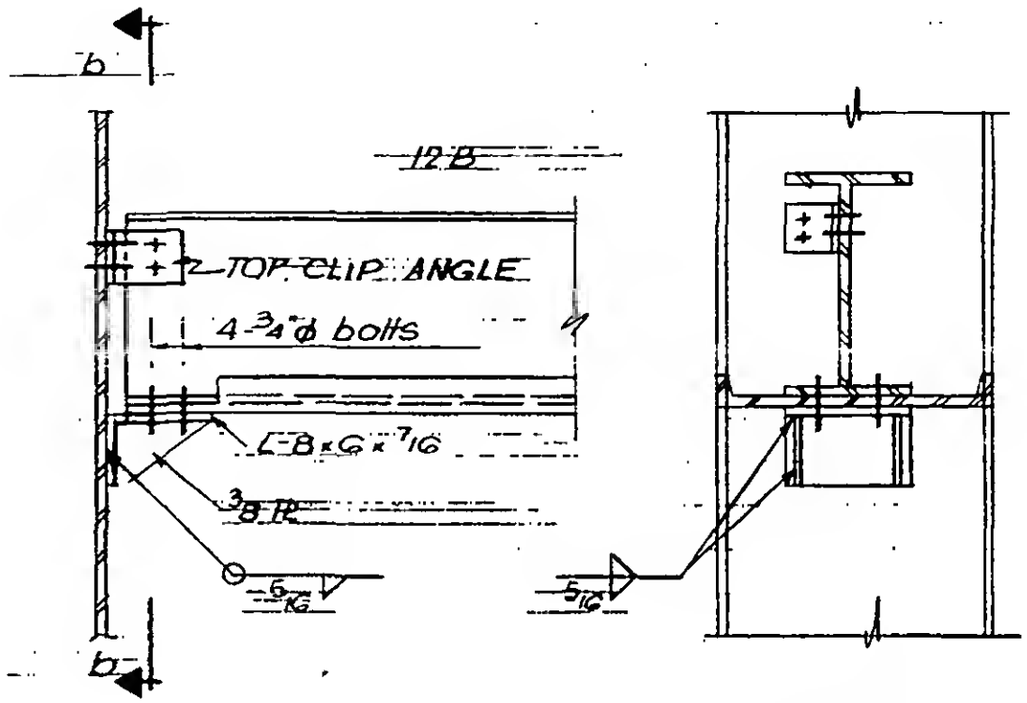

Detail B

Section b-b

LICENSED PROFESSIONAL ENGINEER
LESLIE E. ROBERTSON
No. 34360
UNIVERSITY OF THE STATE OF NEW YORK

G-AB4-18