WORTHINGTON, SKILLING, HELLE & JACKSON — Civil & Structural Engineers

PROJECT: THE WORLD TRADE CENTER | TITLE: LOUVER SUPPORTS - DETAILS H & J | DATE: 12-20-67

REVISIONS

8-29-68

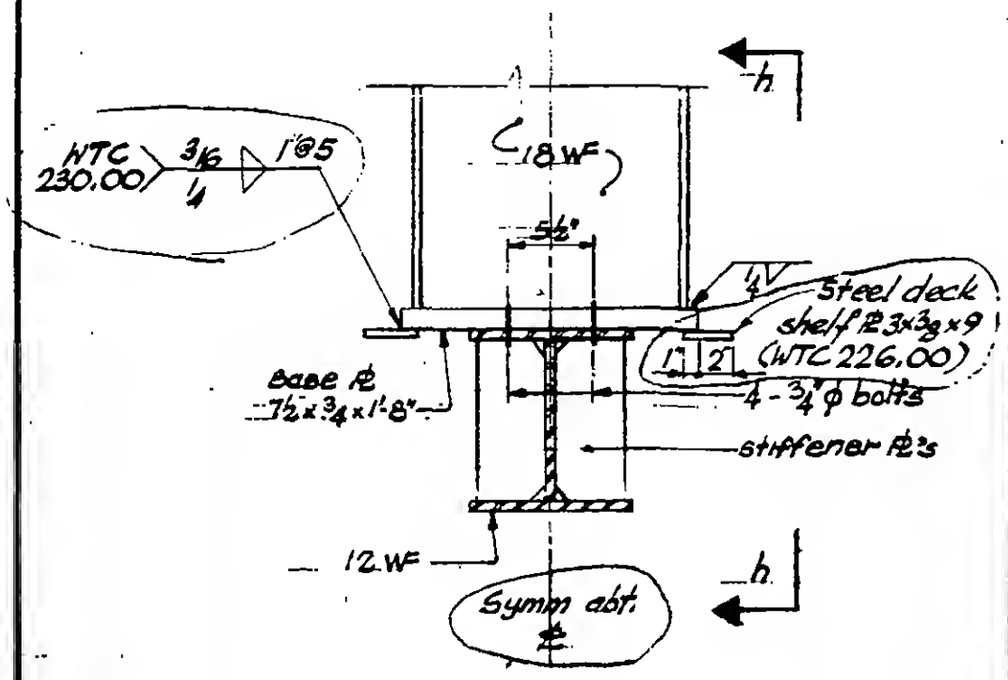

Detail H

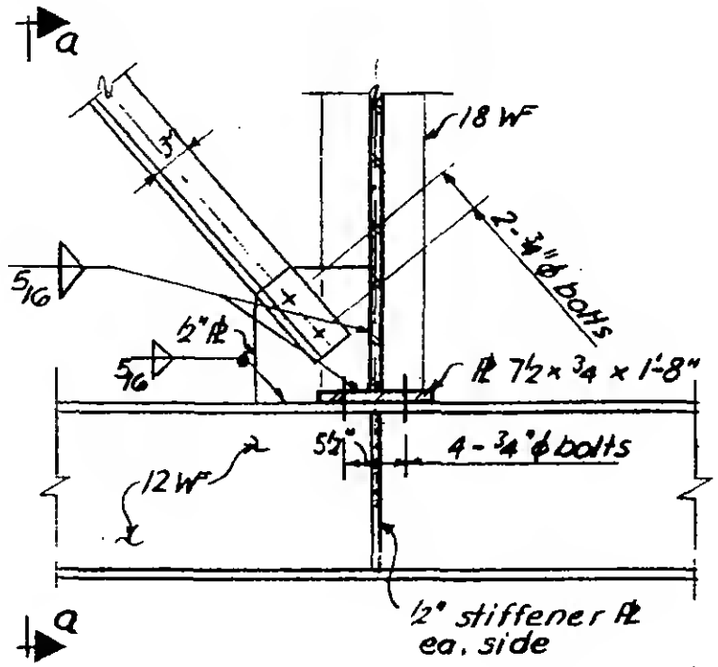

Detail J

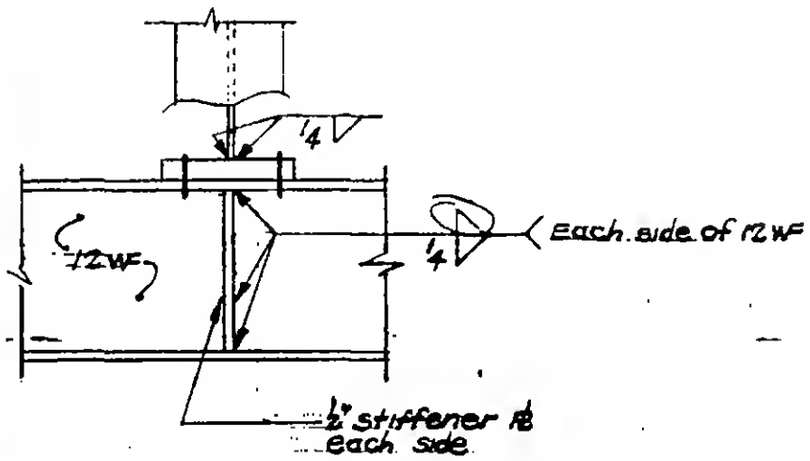

Section h-h

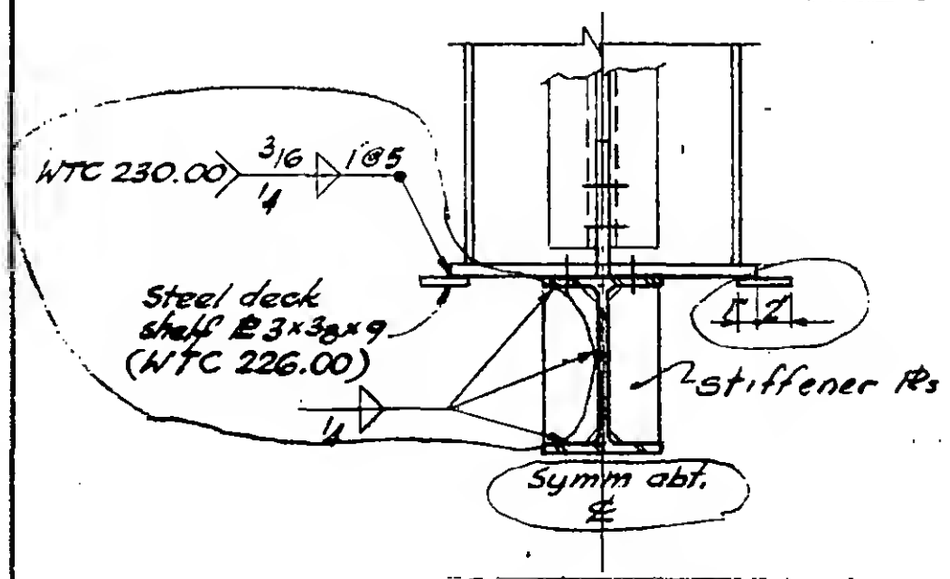

Section a-a

LESLIE E. ROBERTSON — LICENSED PROFESSIONAL ENGINEER — No. 34960 — REGISTERED BY THE STATE OF NEW YORK

S-46