SKILLING - HELLE - CHRISTIANSEN - ROBERTSON Structural & Civil Engineers

PROJECT THE WORLD TRADE CENTER | TITLE LOUVER SUPPORTS - DETAILS K & L | DATE 12-20-67

REVISIONS

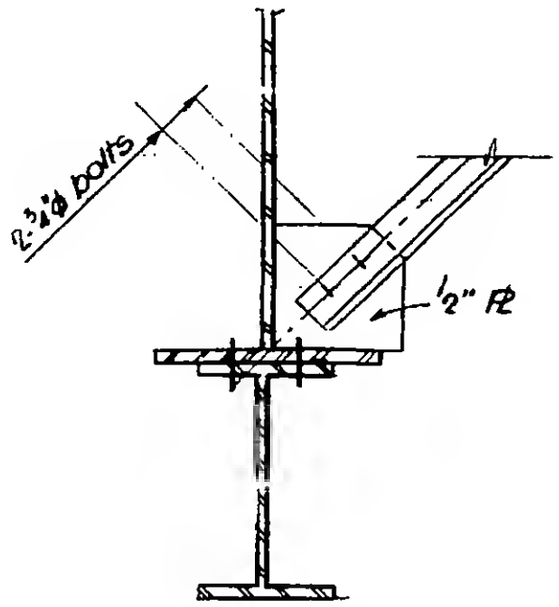

Section a-a

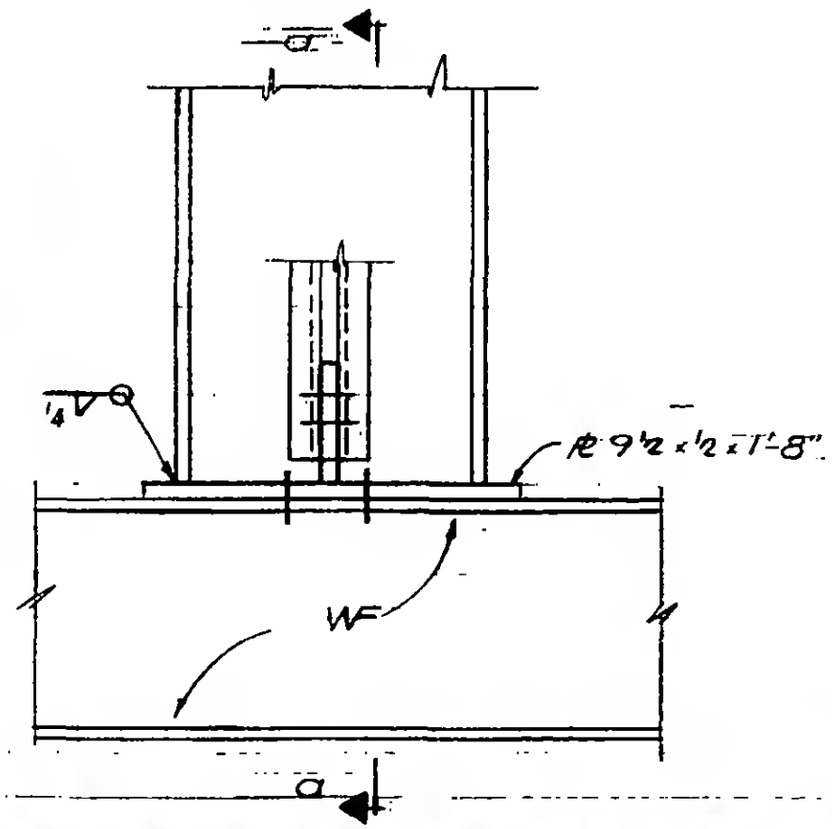

Detail K

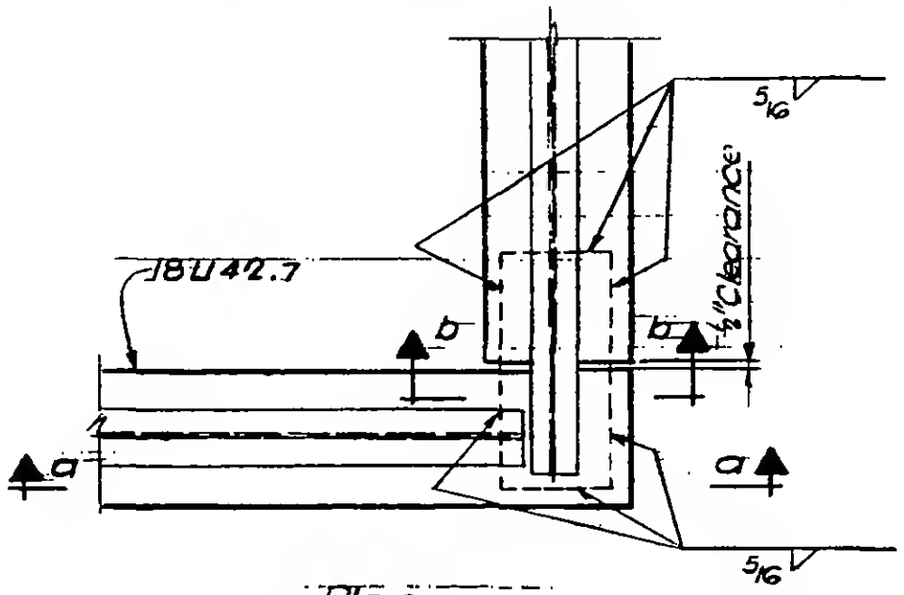

Plan

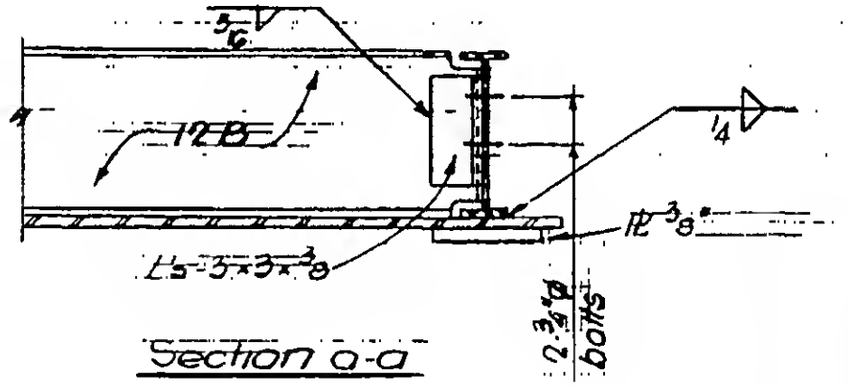

Section a-a

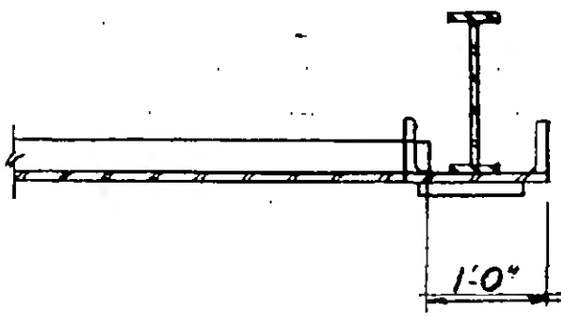

Section b-b

Detail L

G-486-29

LICENSED PROFESSIONAL ENGINEER
LESLIE E. ROBERTSON
No. 34360
UNIVERSITY OF THE STATE OF NEW YORK