WORTHINGTON, SKILLING, HELLE & JACKSON — Civil & Structural Engineers

PROJECT THE WORLD TRADE CENTER | TITLE SECTION DETAILS 810A, 810B, 811A, 811B, 811C, 812A, 812G | DATE 6-19-67

REVISIONS

8-14-67

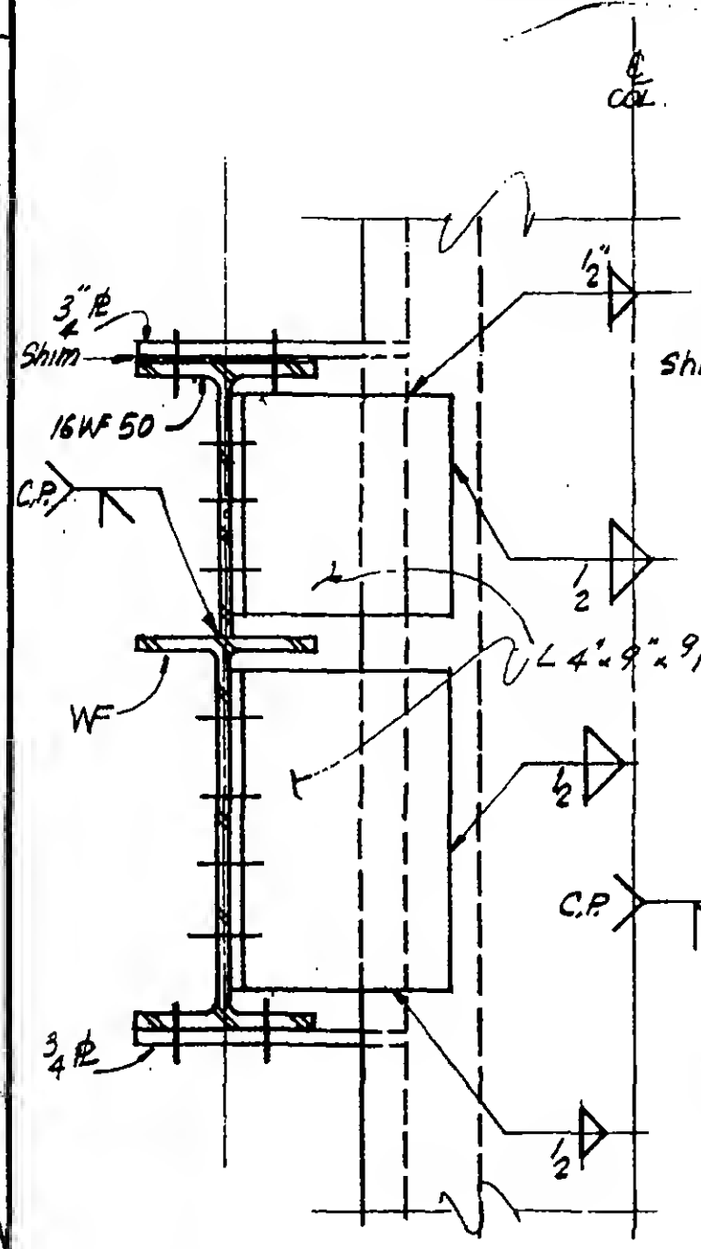


SECTION a-a

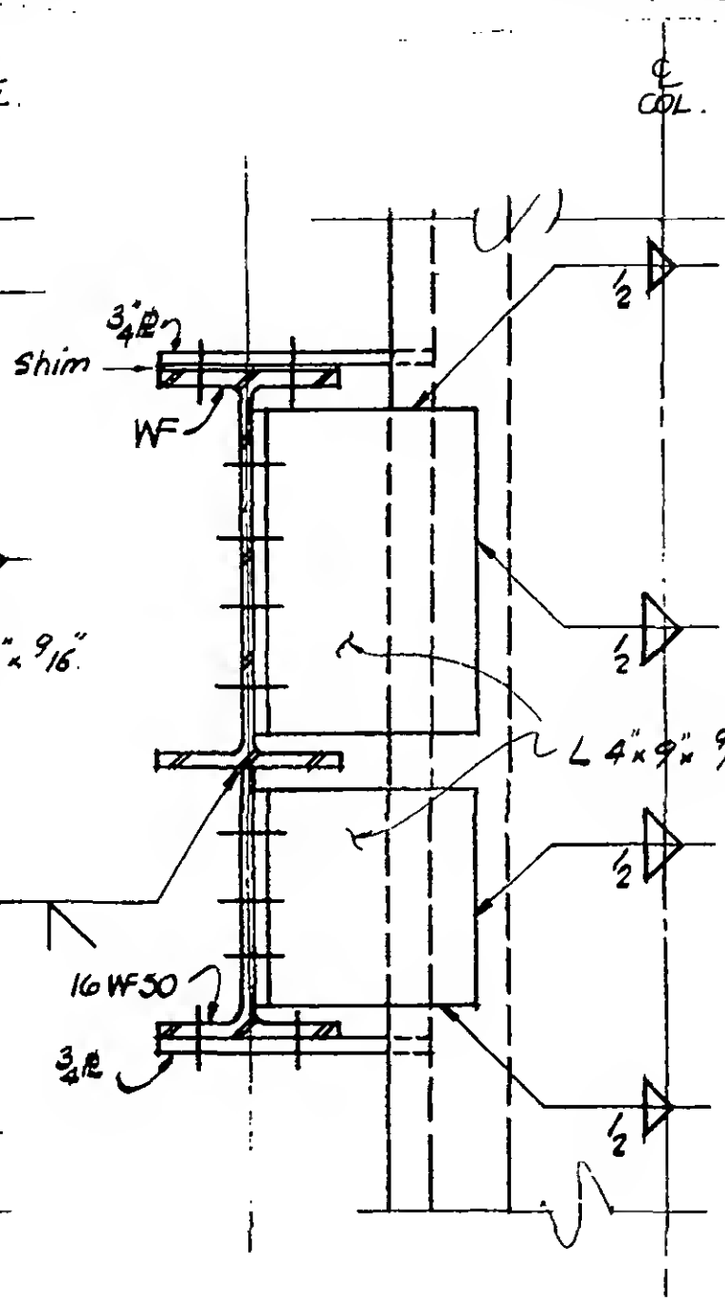


SECTION g-g

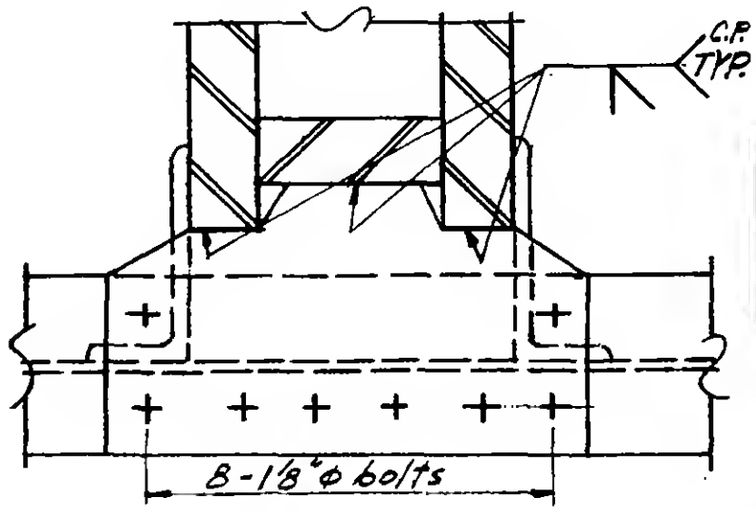


SECTION b-b
(SECTION d-d Similar)

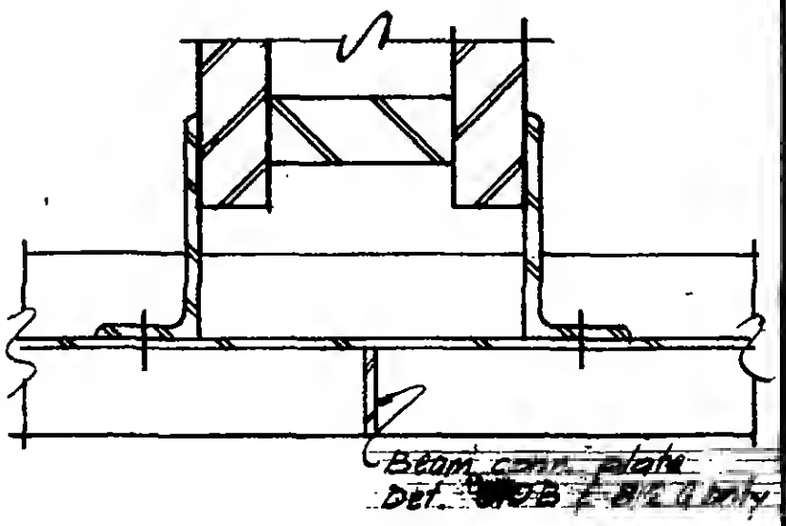


SECTION c-c

LICENSED PROFESSIONAL ENGINEER
LESLIE E. ROBERTSON
No. 34360
UNIVERSITY OF THE STATE OF NEW YORK

G-AB5-7