SKILLING - HELLE - CHRISTIANSEN - ROBERTSON — Structural & Civil Engineers

PROJECT THE WORLD TRADE CENTER | TITLE VERTICAL BRACING DETAIL 812 G, H, K & M | DATE 3-13-68

REVISIONS

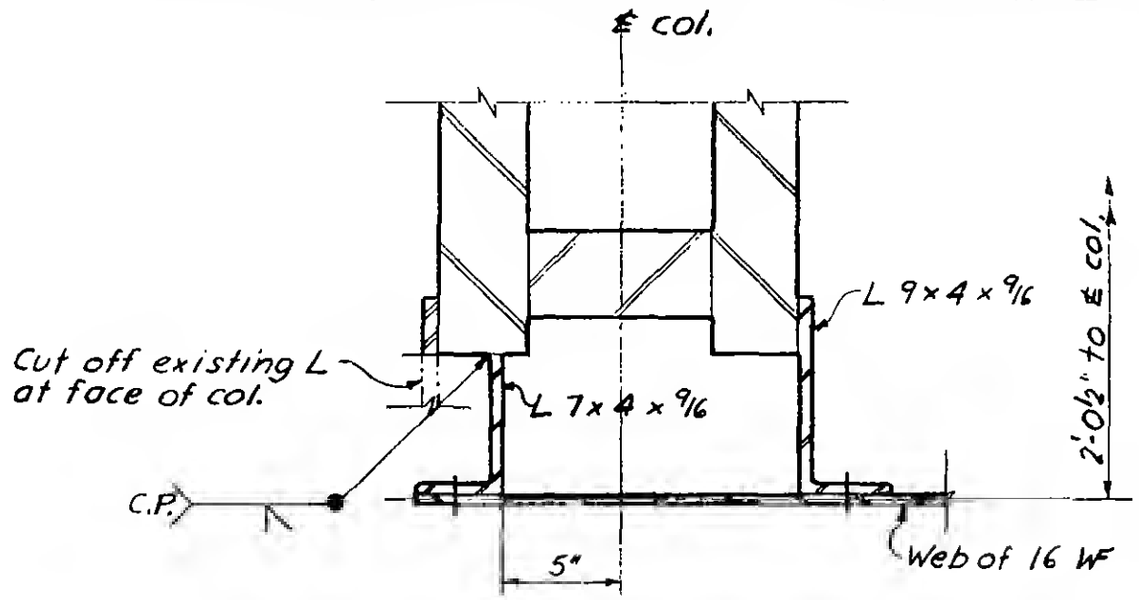

Section e-e

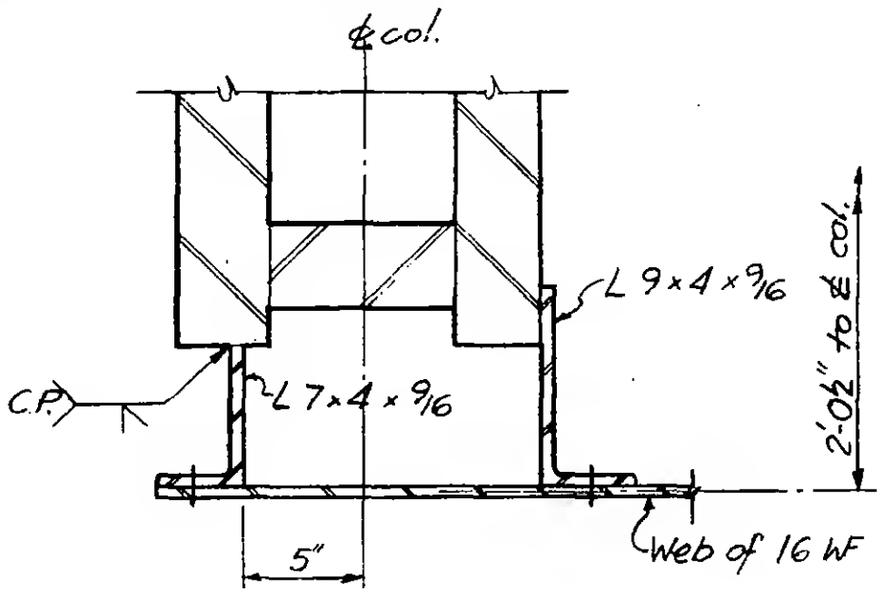

Section e-e

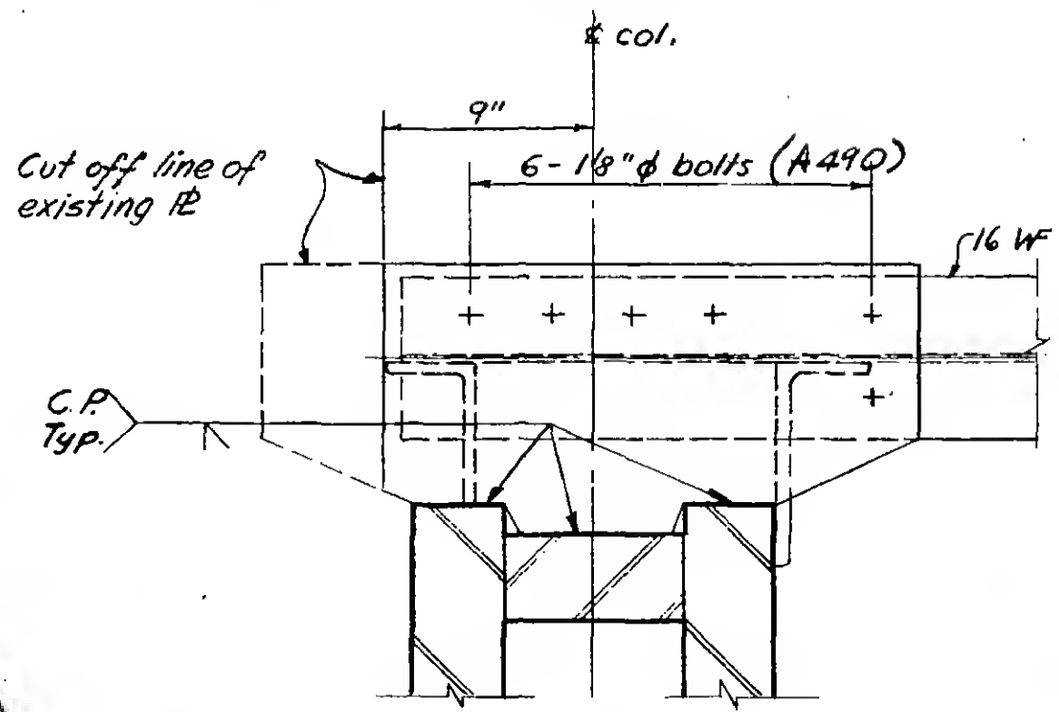

Section d-d

Detail 812 H & G

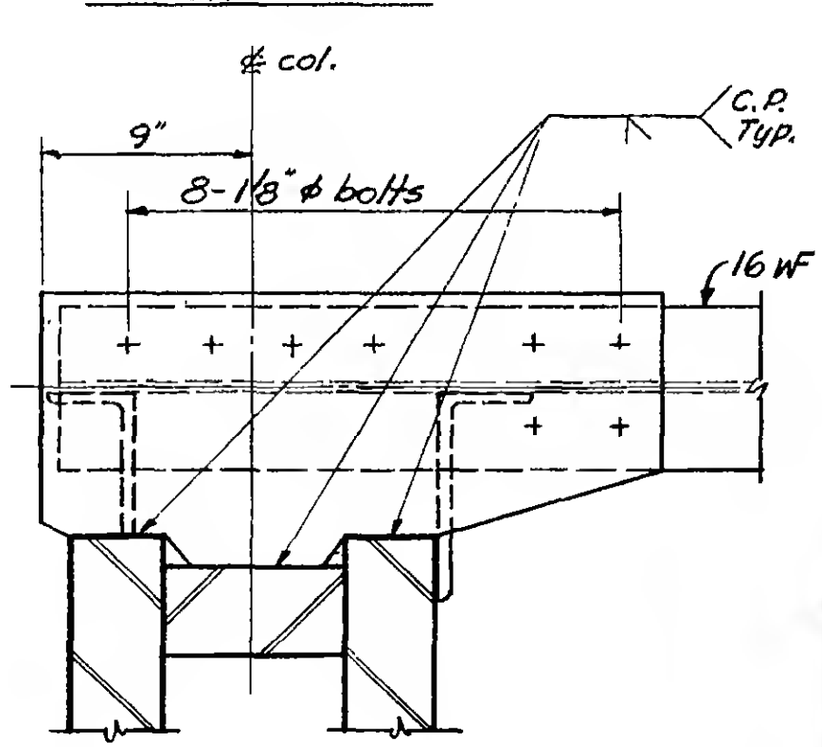

Section d-d

Detail 812 K & M

LICENSED PROFESSIONAL ENGINEER LESLIE E. ROBERTSON No. 34360 UNIVERSITY OF THE STATE OF NEW YORK

6-AB5-7.1