WORTHINGTON, SKILLING, HELLE & JACKSON — Civil & Structural Engineers

PROJECT THE WORLD TRADE CENTER | TITLE CONNECTION DETAIL 812 D,E,F & G | DATE 8-14-67

REVISIONS

2-9-68

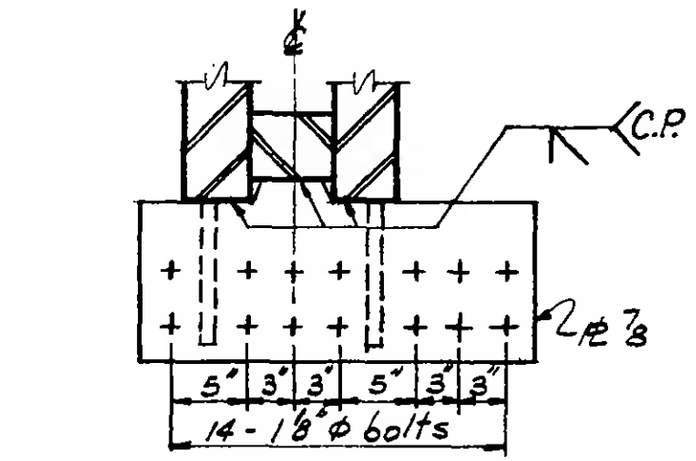

SECTION 6-6

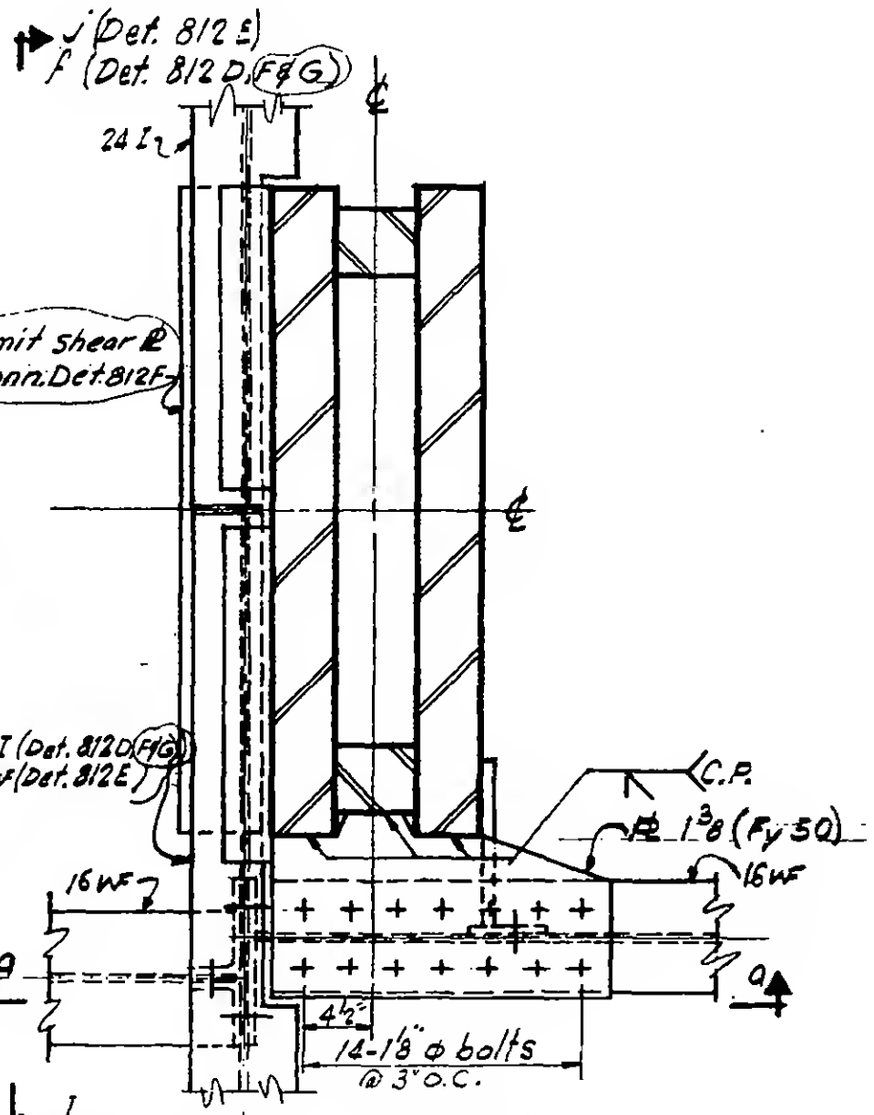

PLAN

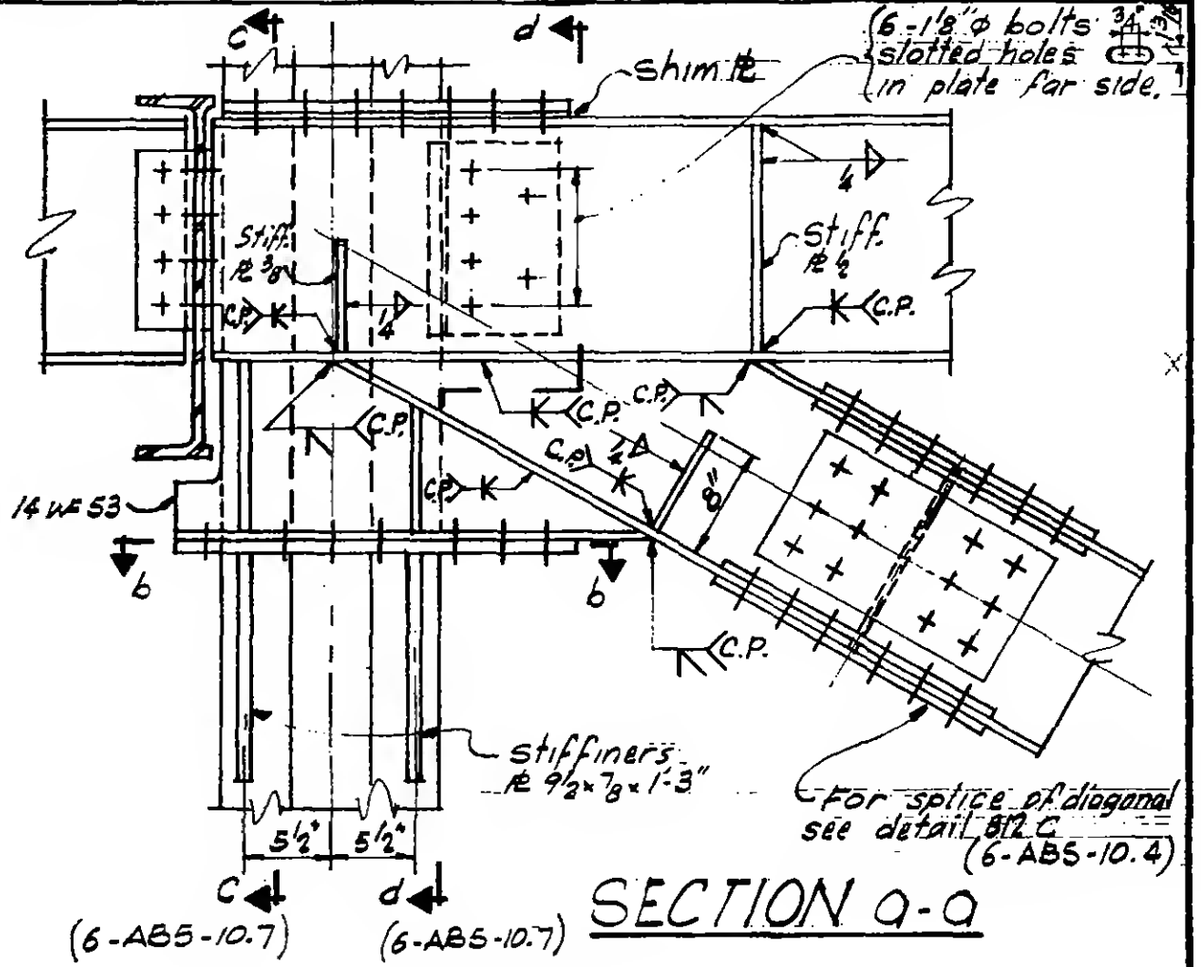

SECTION a-a

LICENSED PROFESSIONAL ENG. NEW YORK
LESLIE E. ROBERTSON
No. 34360
UNIVERSITY OF THE STATE OF NEW YORK

6-ABS-10.6