WORTHINGTON, SKILLING, HELLE & JACKSON — Civil & Structural Engineers

PROJECT THE WORLD TRADE CENTER | TITLE CONNECTION DETAIL 812 D, E, F & G | DATE 8-14-67

REVISIONS

2-9-68

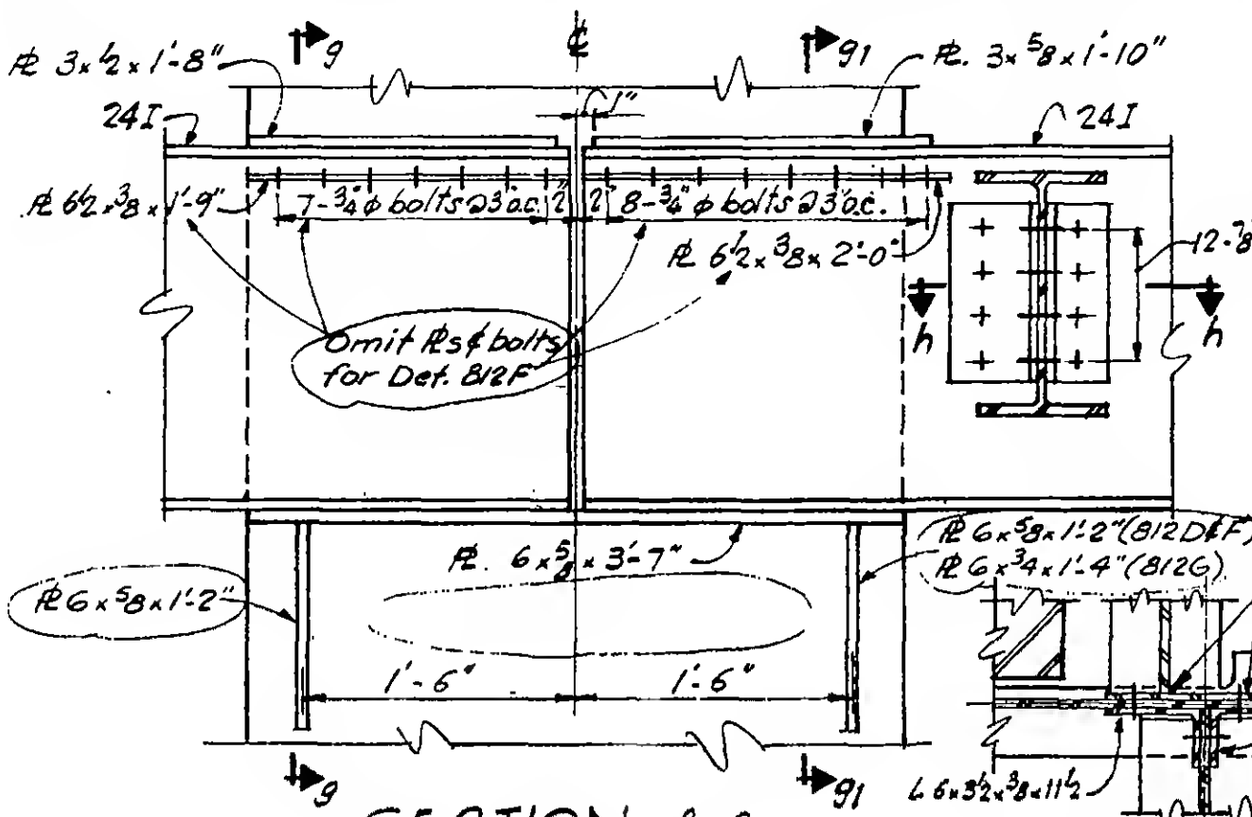

SECTION f-f

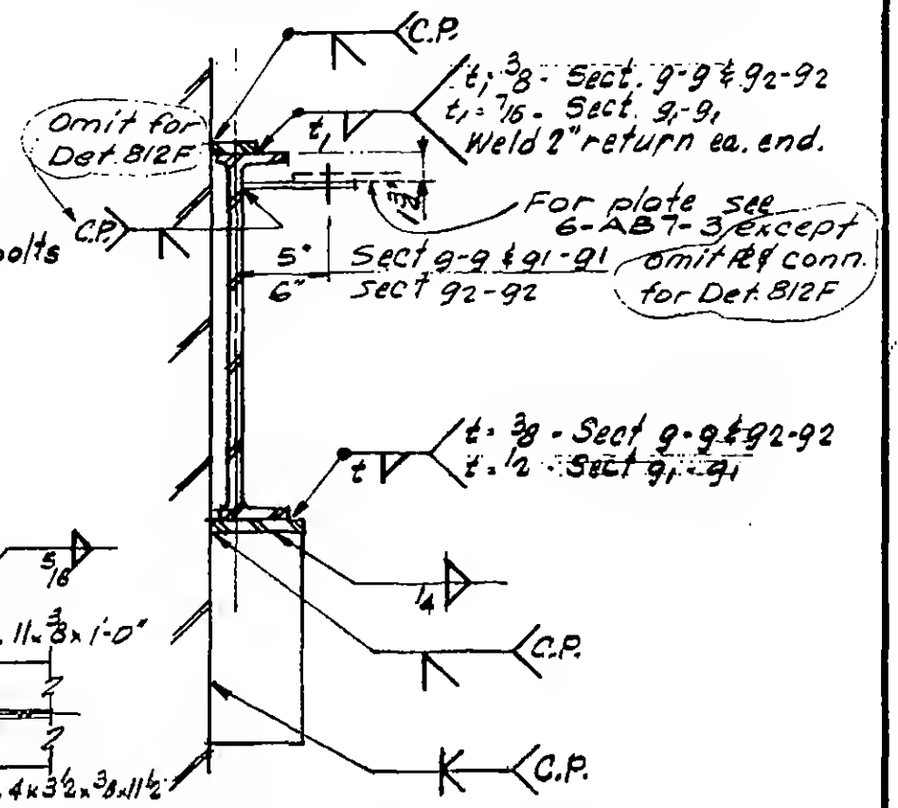

SECTION h-h

SECTION g-g, g₁-g₁ & g₂-g₂

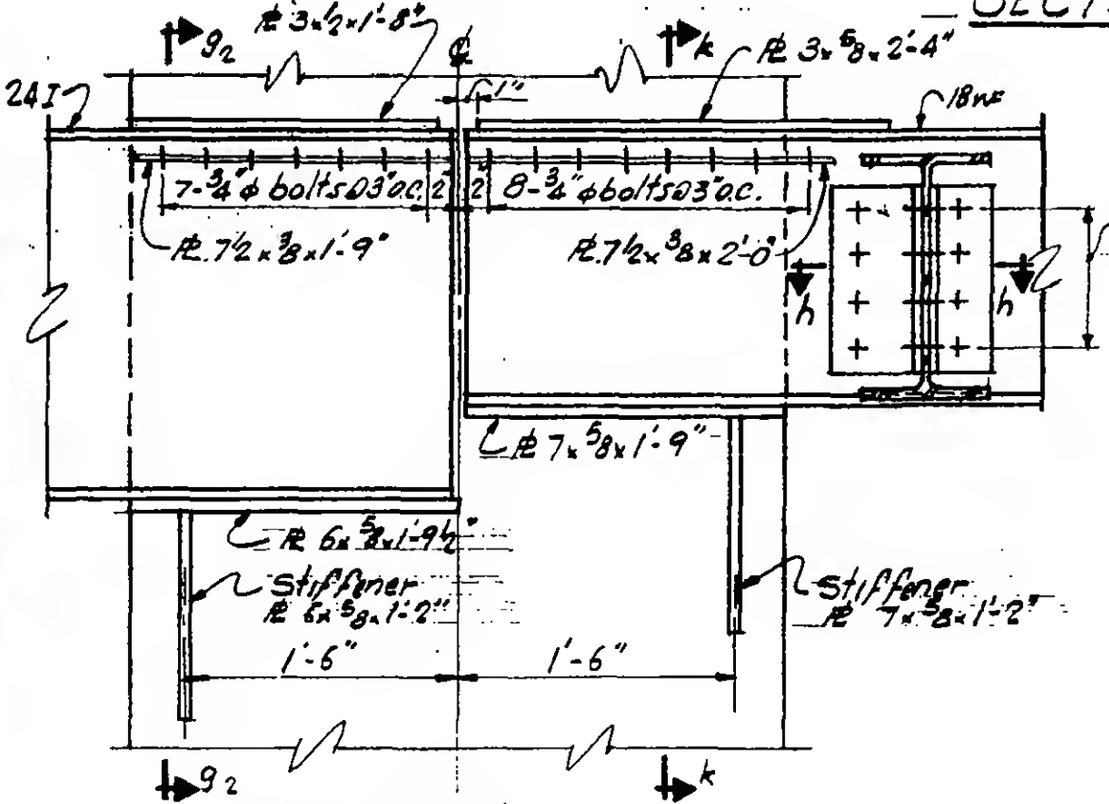

SECTION J-J

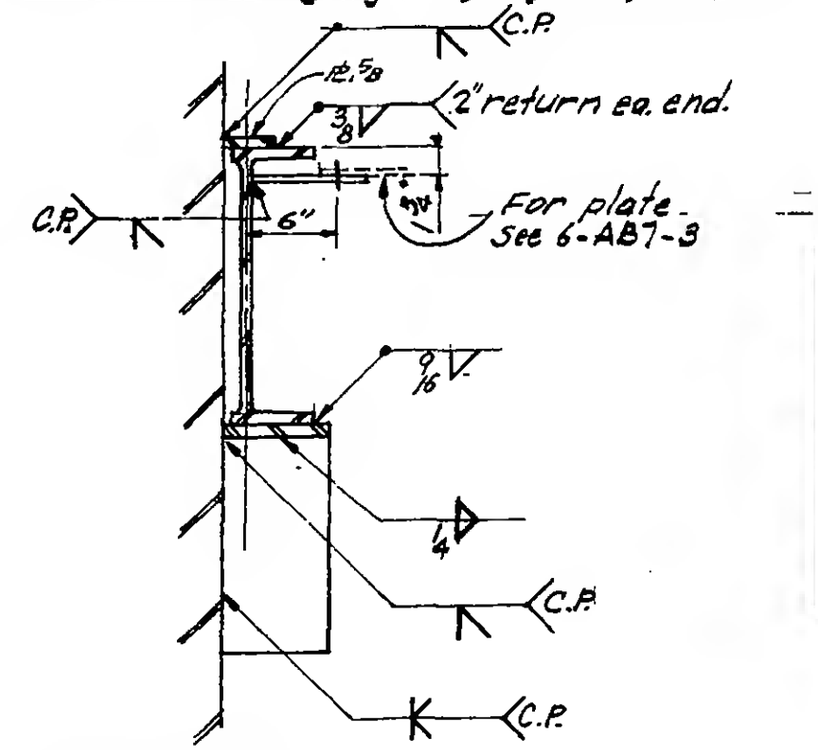

SECTION k-k

LICENSED PROFESSIONAL ENGINEER
LESLIE E. ROBERTSON
No. 34360
UNIVERSITY OF THE STATE OF NEW YORK

6-AB5-10.8