WORTHINGTON, SKILLING, HELLE & JACKSON — Civil & Structural Engineers

PROJECT: THE WORLD TRADE CENTER | TITLE: VERTICAL BRACING DETAIL 813 C | DATE: 3-13-68

REVISIONS

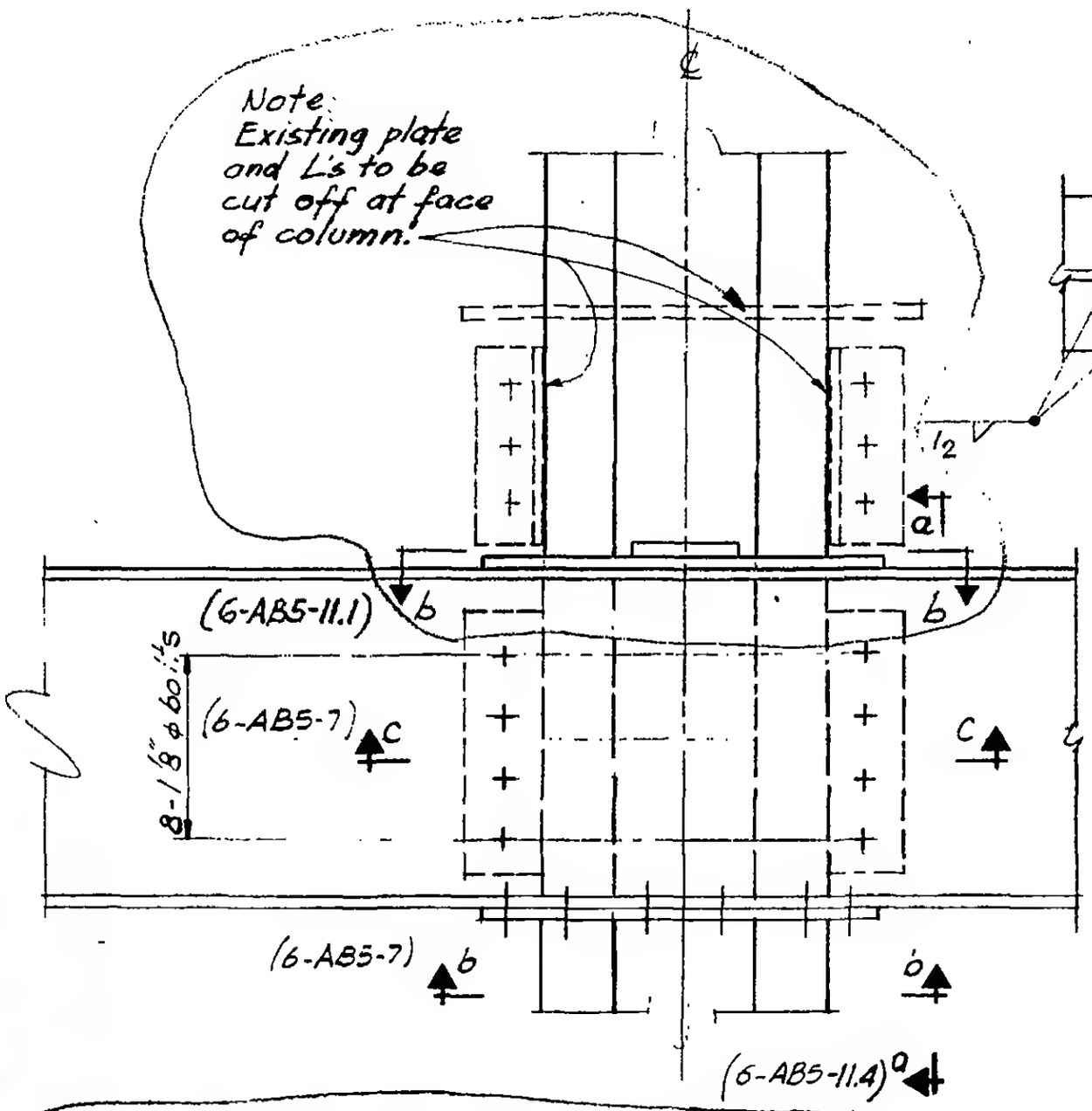


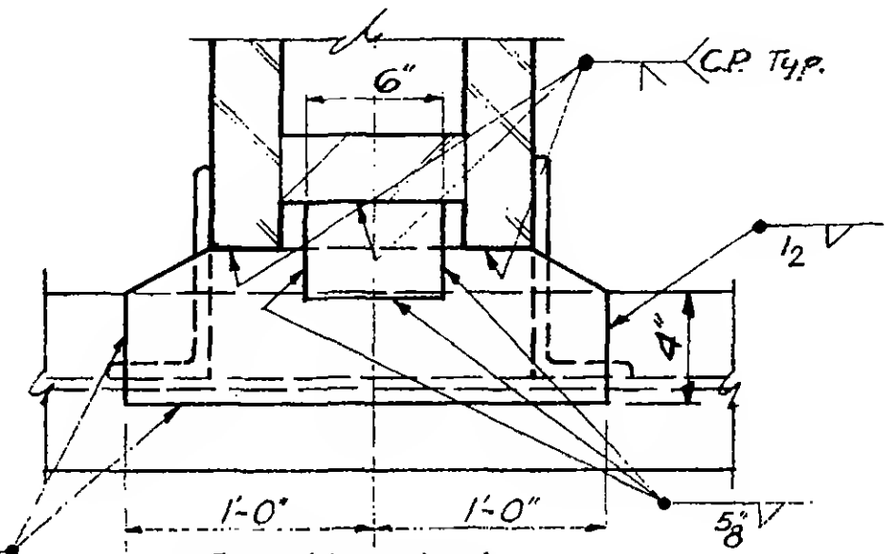


Section b-b

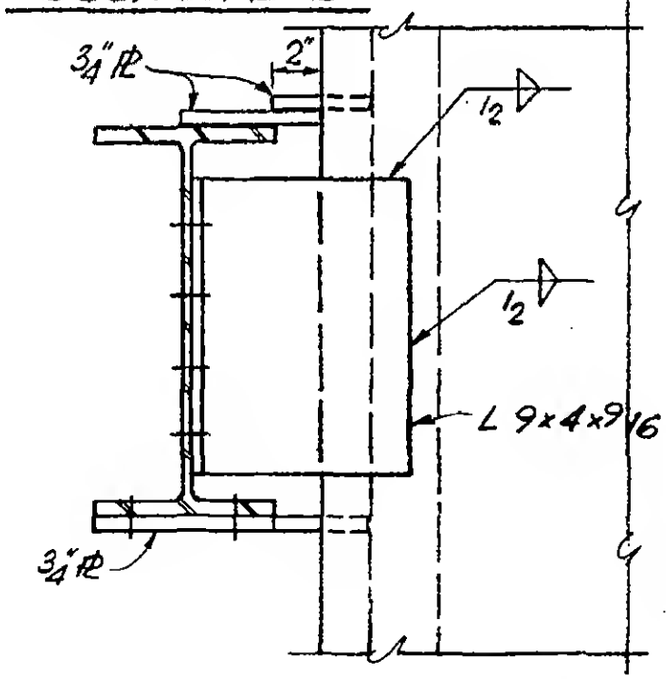


Section a-a

Detail 813C is at col. 604, floor 4, Tower A and was formerly detail 813A. Circled area indicates portion revised.

LICENSED PROFESSIONAL ENGINEER
LESLIE E. ROBERTSON
No. 34360
UNIVERSITY OF THE STATE OF NEW YORK

6-AB5-11.1