WORTHINGTON, SKILLING, HELLE & JACKSON — Civil & Structural Engineers

PROJECT	TITLE	DATE
THE WORLD TRADE CENTER	VERTICAL BRACING DETAIL 813 D	3-13-68

REVISIONS

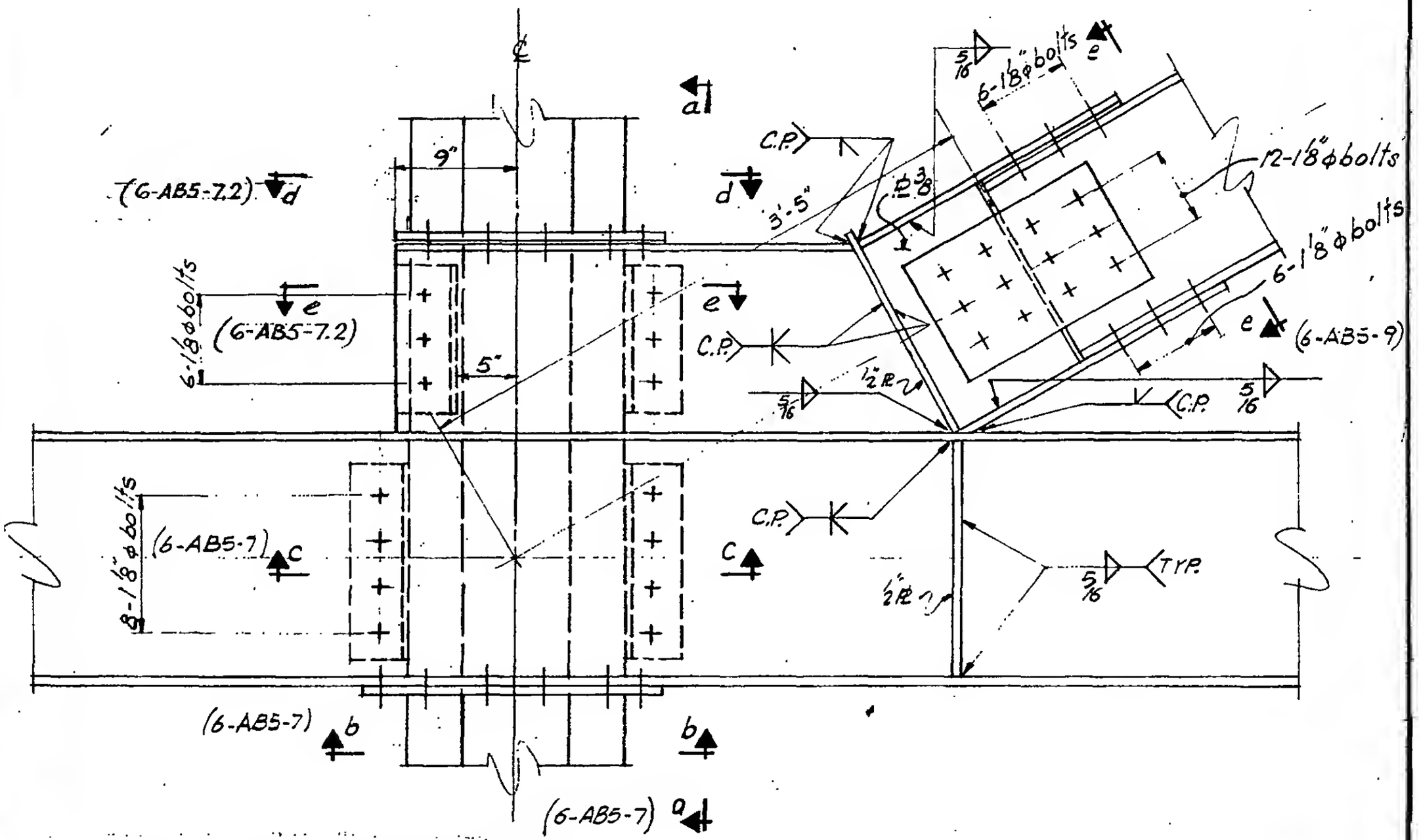

Detail 813D is at col 906, floor 2, Tower A and was formerly detail 813B. Circled area indicates portion revised.

LICENSED PROFESSIONAL ENGINEER — LESLIE E. ROBERTSON — No. 34360 — UNIVERSITY OF THE STATE OF NEW YORK

6-AB5-11.2