WORTHINGTON, SKILLING, HELLE & JACKSON — Civil & Structural Engineers

PROJECT: THE WORLD TRADE CENTER | TITLE: CONNECTION DETAIL 830 A | DATE: 7-14-67

REVISIONS
9-29-67
10-31-67
12-14-67

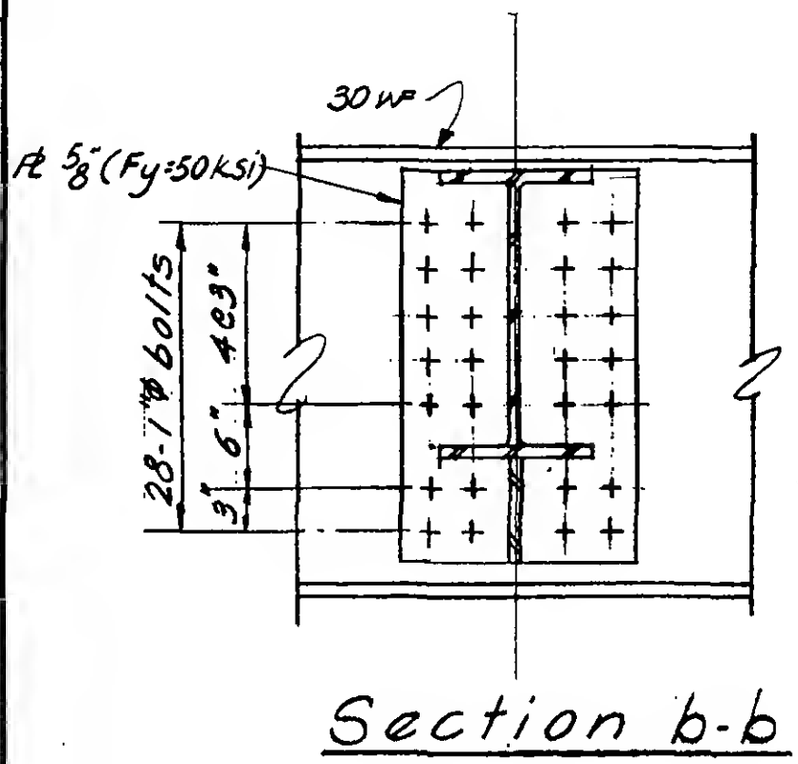

Section b-b

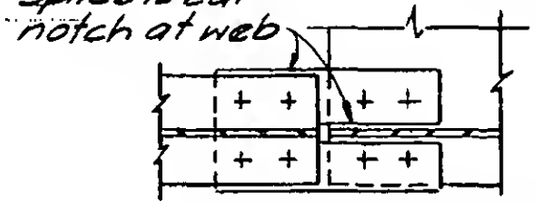

Section e-e

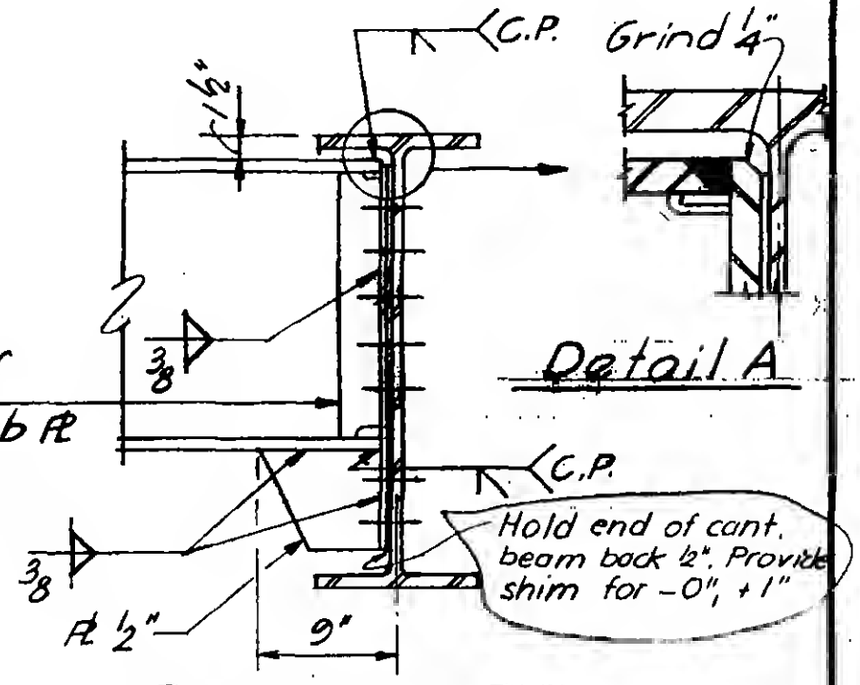

Detail A

Section a-a

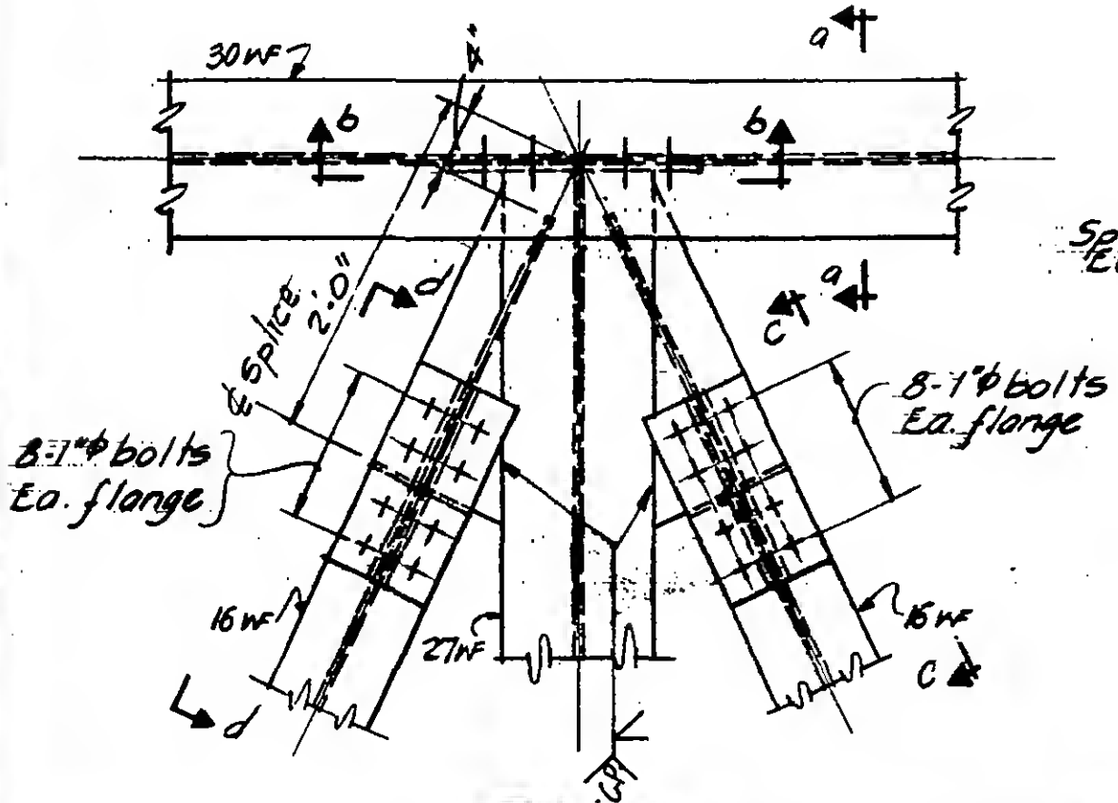

Plan

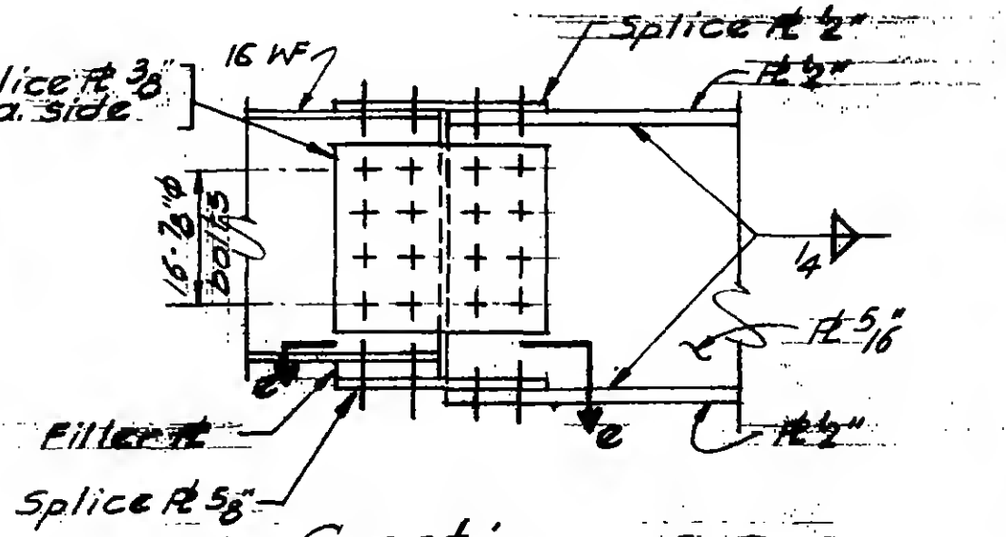

Section c-c

Section d-d (Opp. hand)

LICENSED PROFESSIONAL ENGINEER — LESLIE E. ROBERTSON — No. 34360 — THE STATE OF NEW YORK

6-AB5-28