WORTHINGTON, SKILLING, HELLE & JACKSON — Civil & Structural Engineers

PROJECT THE WORLD TRADE CENTER | TITLE CONNECTION DETAIL 832 A, B | DATE 7-14-67

REVISIONS

9-29-67

12-14-67

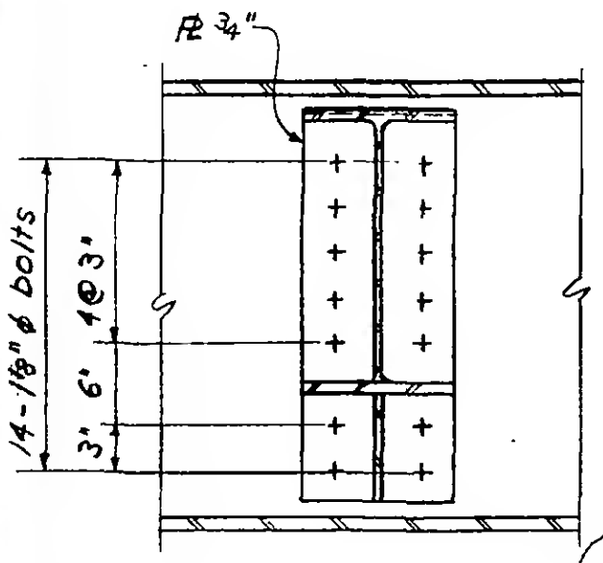

Section a-a

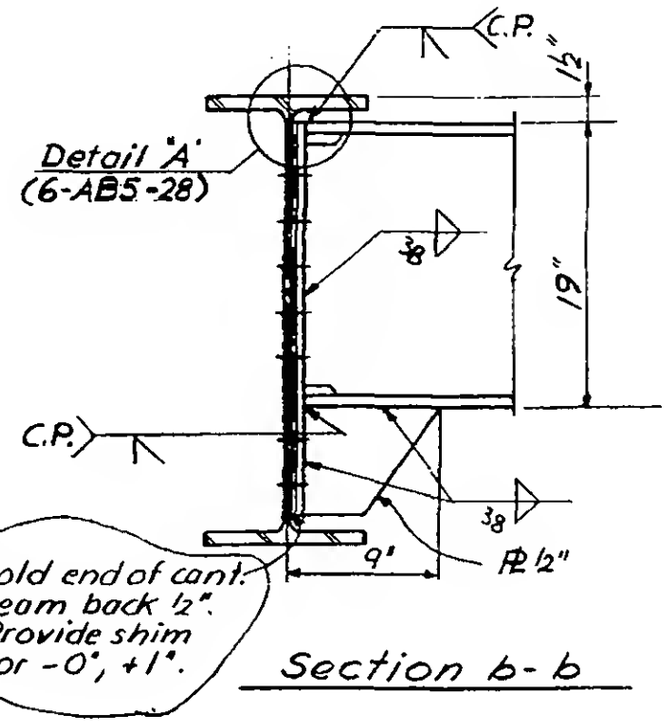

Section b-b

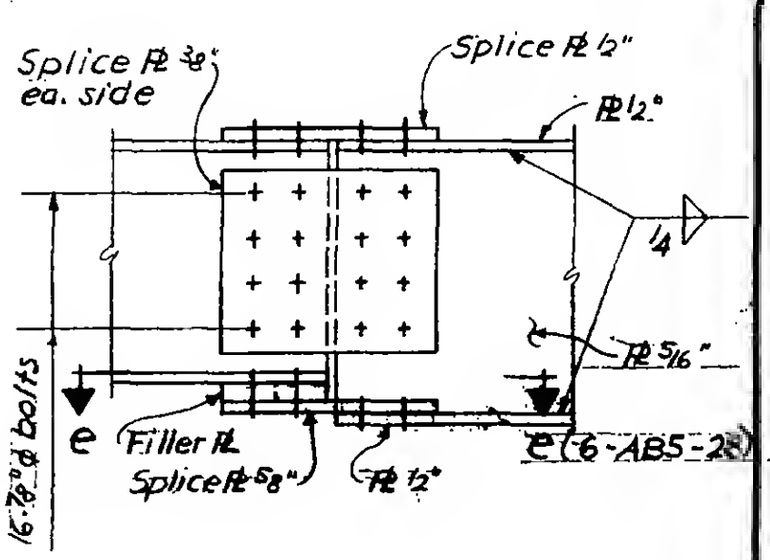

Section c-c

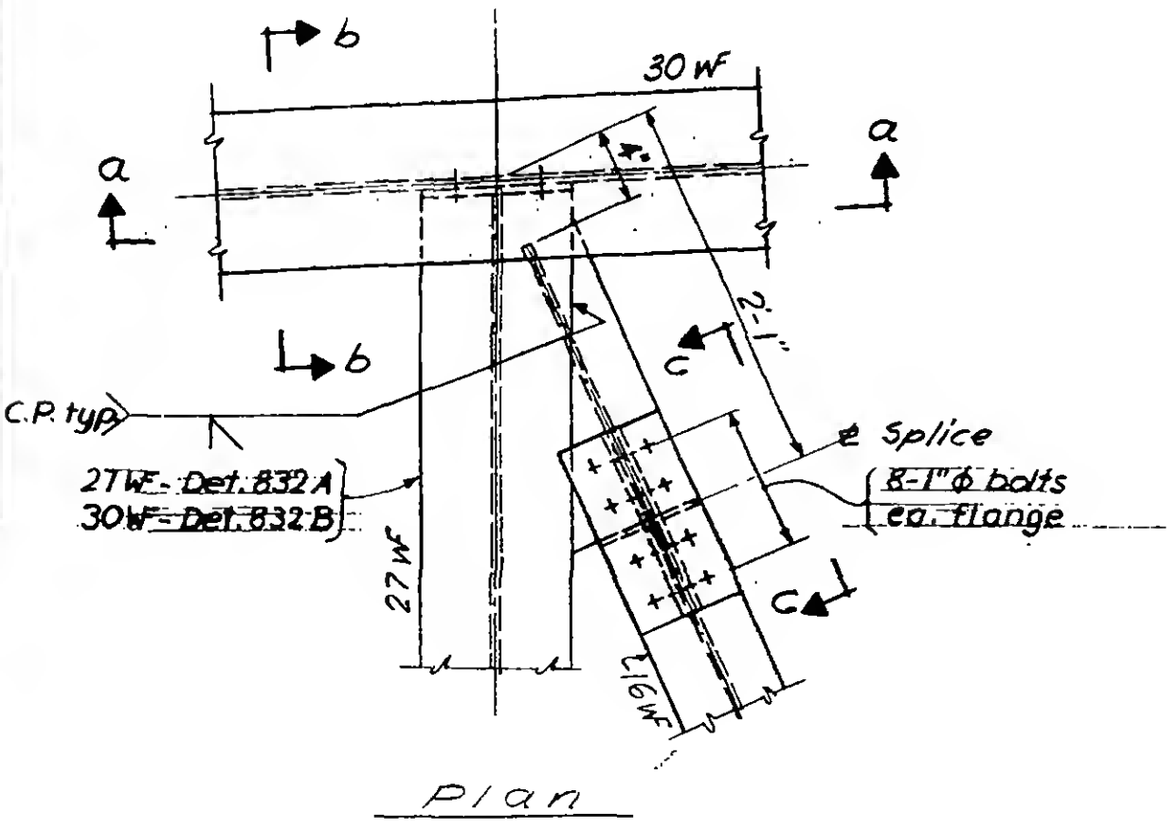

Plan

LESLIE E. ROBERTSON
REGISTERED PROFESSIONAL ENGINEER
No. 34360
UNIVERSITY OF THE STATE OF NEW YORK

6-AB5-30