SKILLING - HELLE - CHRISTIANSEN - ROBERTSON Structural & Civil Engineers

PROJECT THE WORLD TRADE CENTER | TITLE CONNECTION DETAIL 832C | DATE 9-29-67

REVISIONS

12-14-67

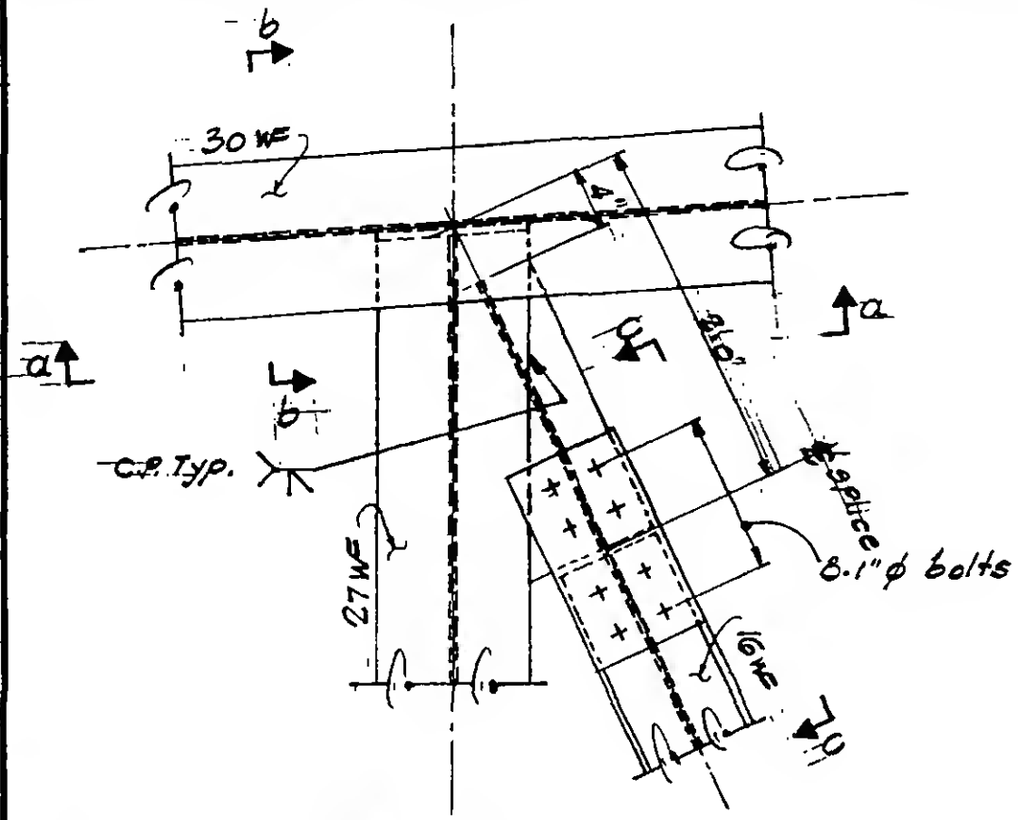

PLAN

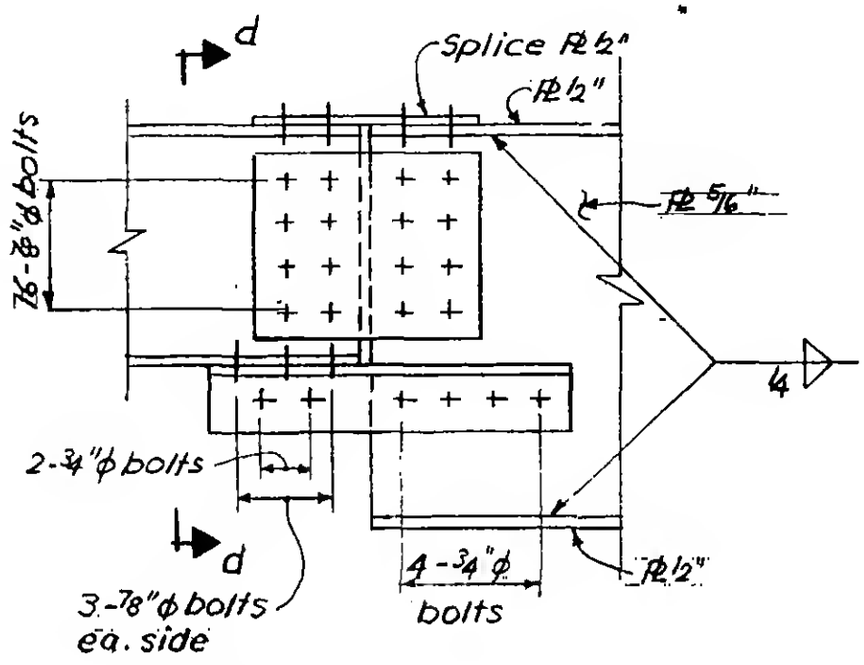

Section c-c

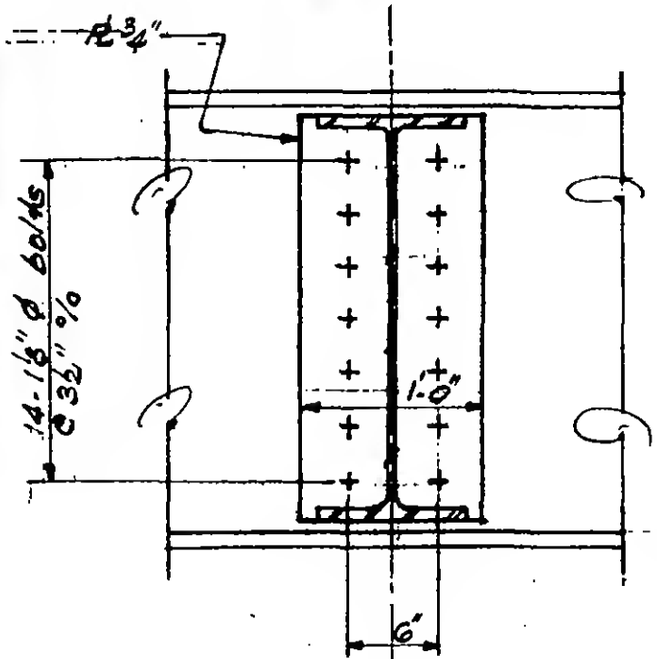

Section a-a

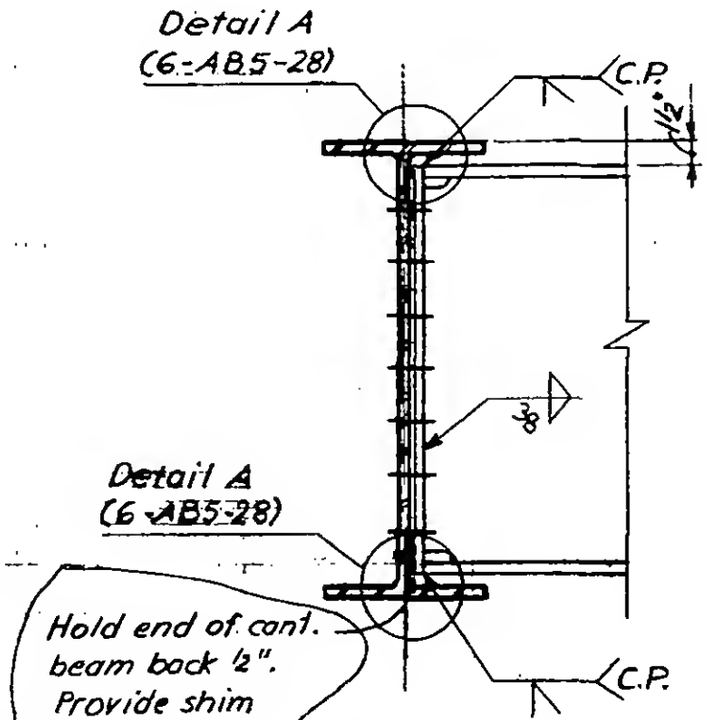

Section b-b

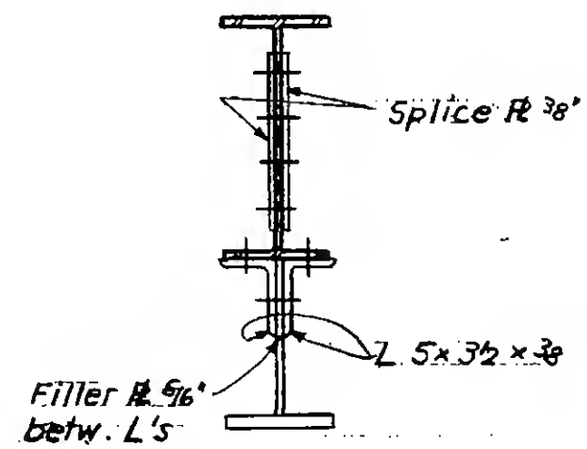

Section d-d

LICENSED PROFESSIONAL ENG. LESLIE E. ROBERTS No. 34360 UNIVERSITY OF THE STATE OF NE.

6-AB5-30.1