WORTHINGTON, SKILLING, HELLE & JACKSON — Civil & Structural Engineers

PROJECT THE WORLD TRADE CENTER | TITLE CONNECTION DETAIL 839A | DATE 7-14-67

REVISIONS

9-15-67

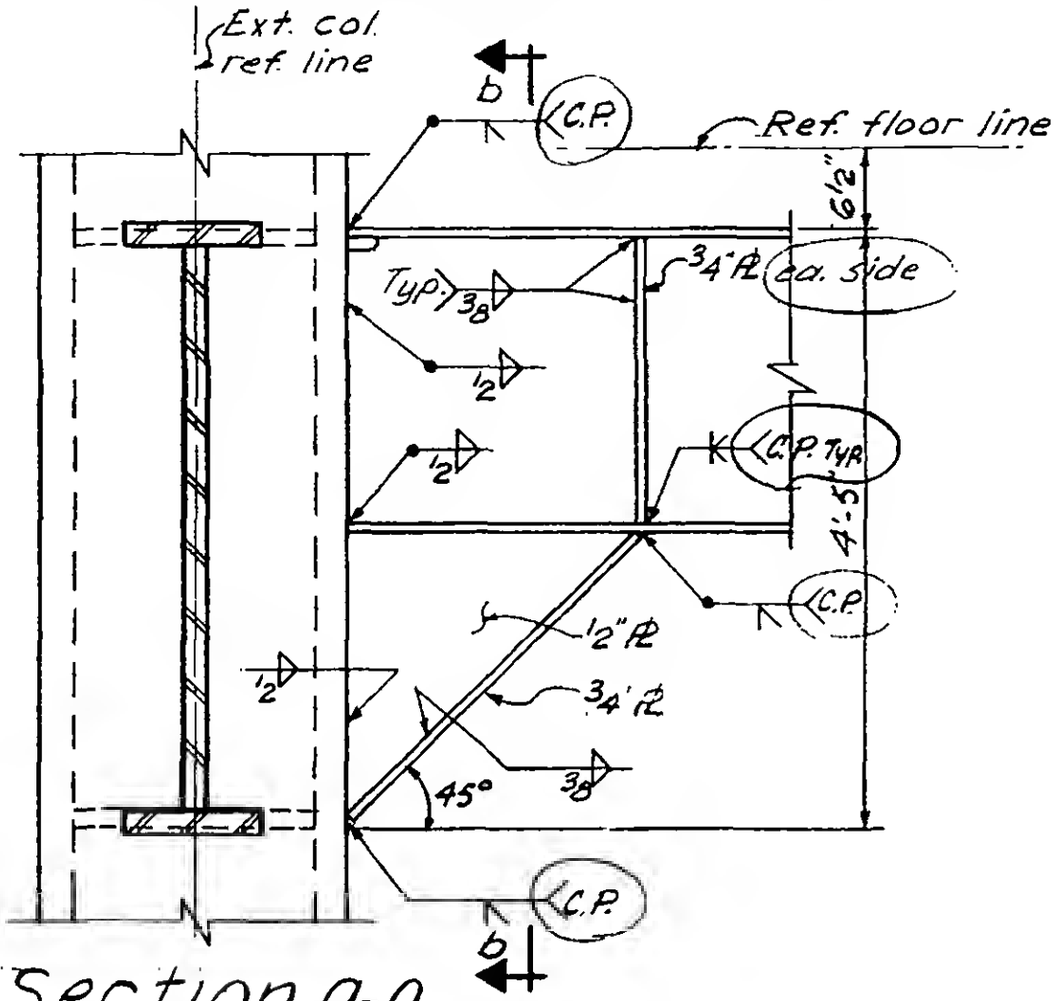


Section a-a

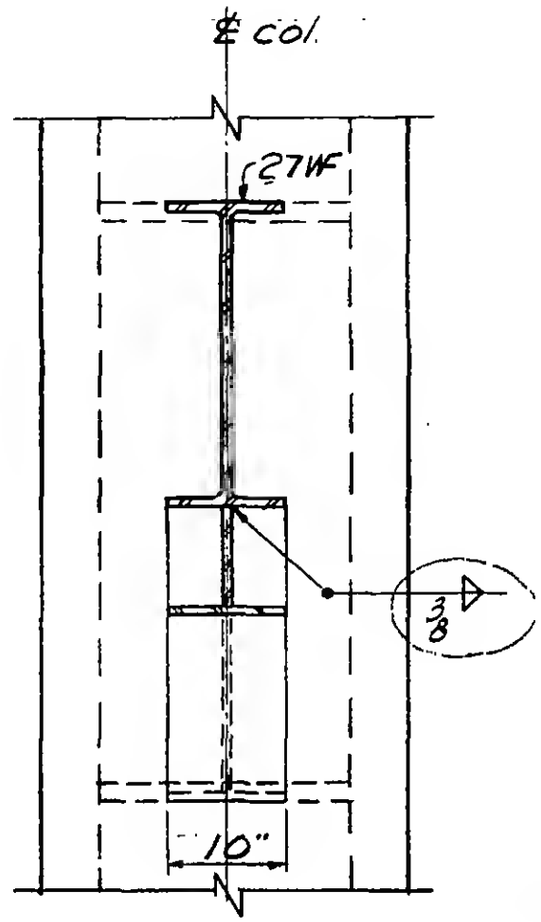


Section b-b

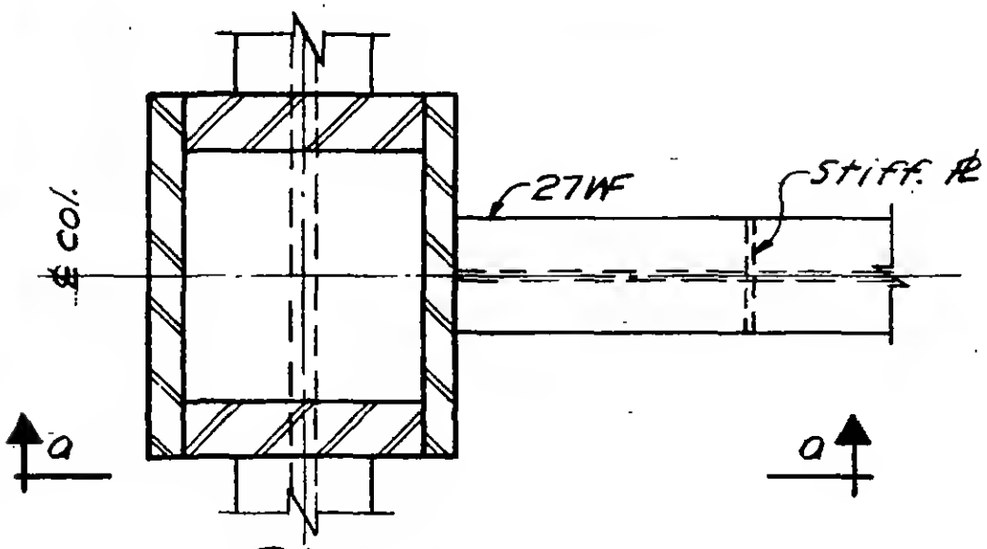


PLAN

LICENSED PROFESSIONAL ENGINEER
LESLIE E. ROBERTSON
No. 34360
LICENSED TO PRACTICE IN THE STATE OF NEW YORK

6-AB5-37