WORTHINGTON, SKILLING, HELLE & JACKSON — Civil & Structural Engineers

PROJECT: THE WORLD TRADE CENTER | TITLE: CONNECTION DETAIL 840 A, B, C, & D | DATE: 7-14-67

REVISIONS
9-15-67
12-14-67

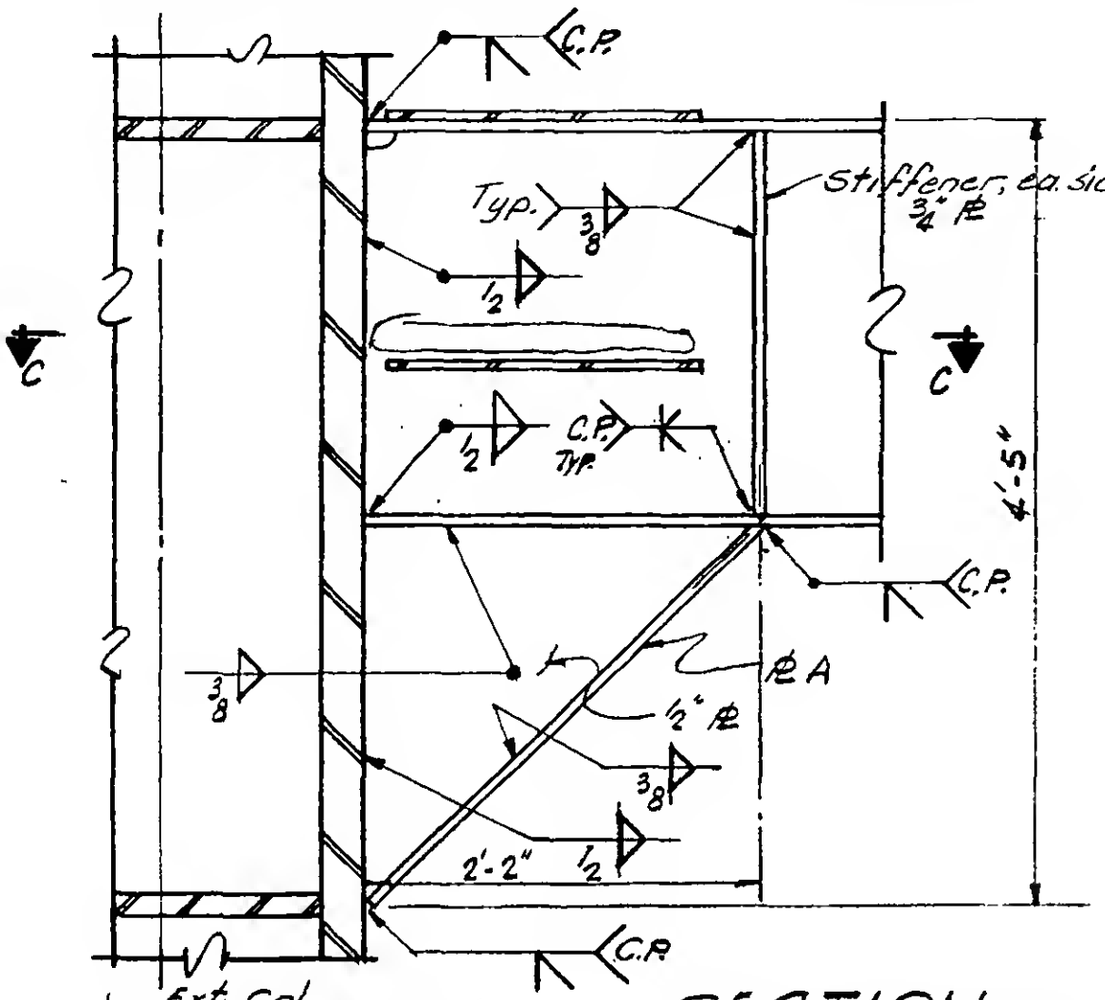

SECTION a-a

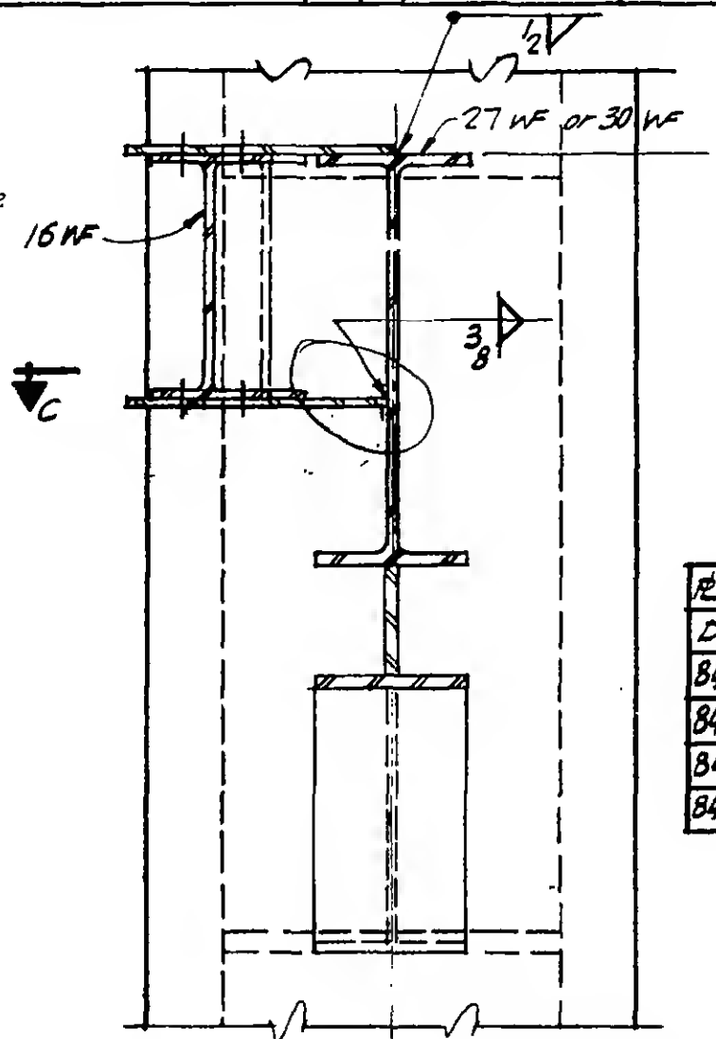

SECTION b-b

℄ SCHEDULE	
Det	℄ A
840A	10" x 3/4
840B	10" x 7/8
840C	10 1/2" x 7/8
840D	10 1/2" x 7/8

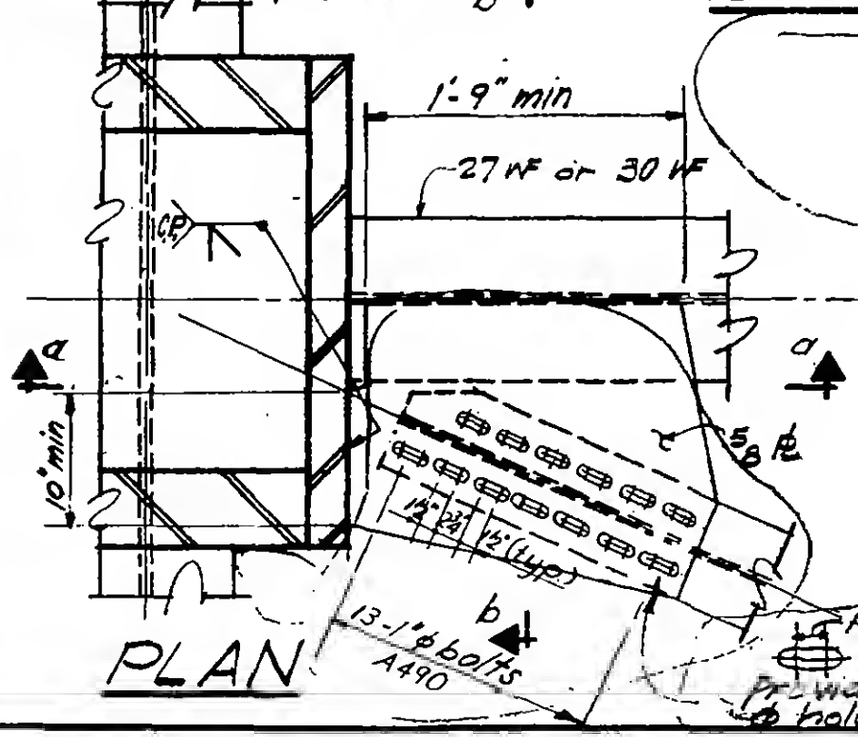

PLAN

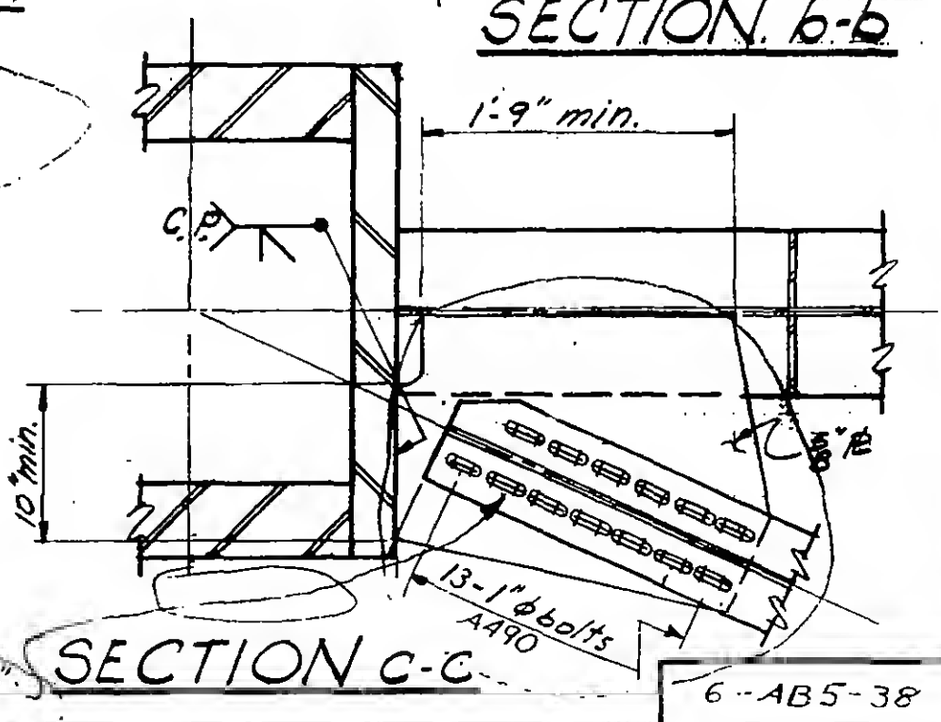

SECTION C-C

1 1/2" slots in ℄ Provide 4" ℄ with 1 1/16" ϕ holes over slots

LICENSED PROFESSIONAL ENGINEER
LESLIE E. ROBERTSON
No. 34360
UNIVERSITY OF THE STATE OF NEW YORK

6-AB5-38