WORTHINGTON, SKILLING, HELLE & JACKSON — Civil & Structural Engineers

PROJECT THE WORLD TRADE CENTER | TITLE CONNECTION DETAIL 848(A) | DATE 7-14-67

REVISIONS
9-15-67

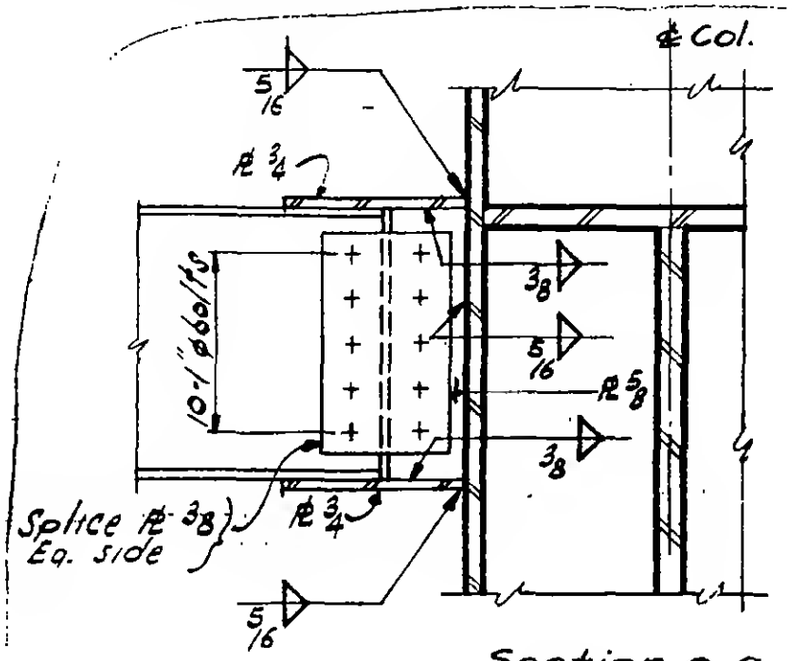

Section a-a

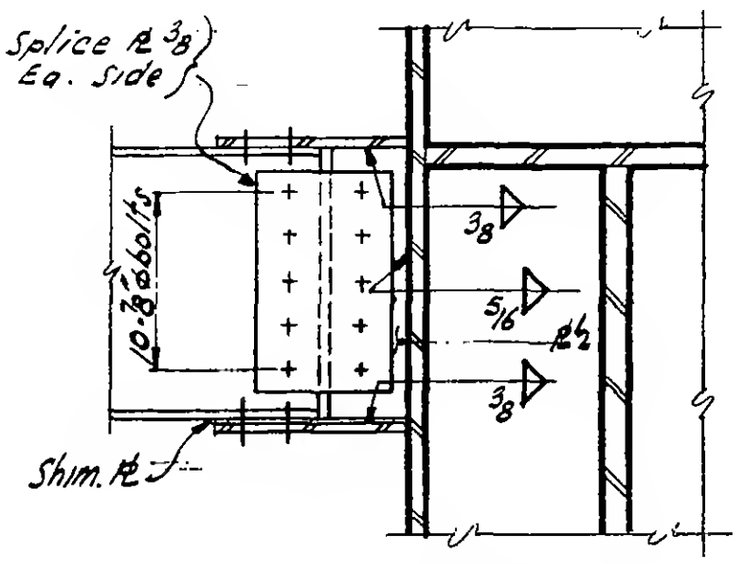

Section b-b

Section c-c, Opp hand

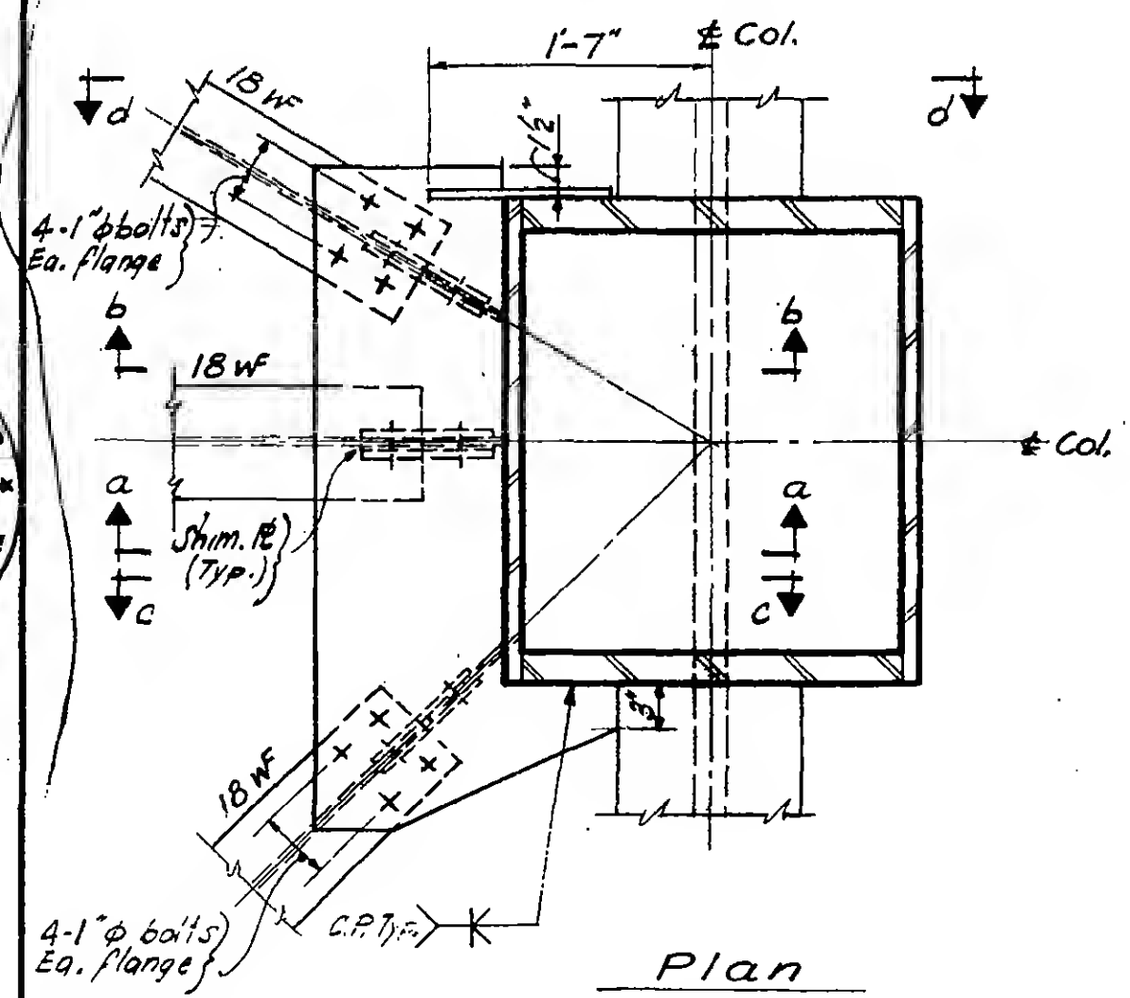

Plan

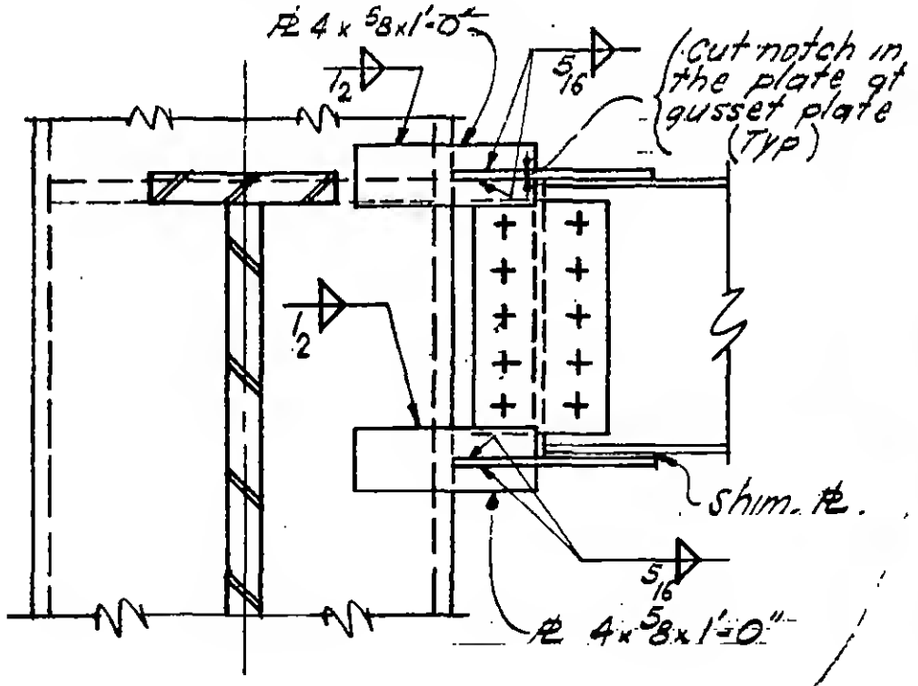

Section d-d

LESLIE E. ROBERTSON LICENSED PROFESSIONAL ENGINEER No. 34360 STATE OF NEW YORK

6-AB5-46