SKILLING - HELLE - CHRISTIANSEN - ROBERTSON Structural & Civil Engineers

PROJECT THE WORLD TRADE CENTER | TITLE CONNECTION DETAIL SG4A | DATE 9-29-67

REVISIONS

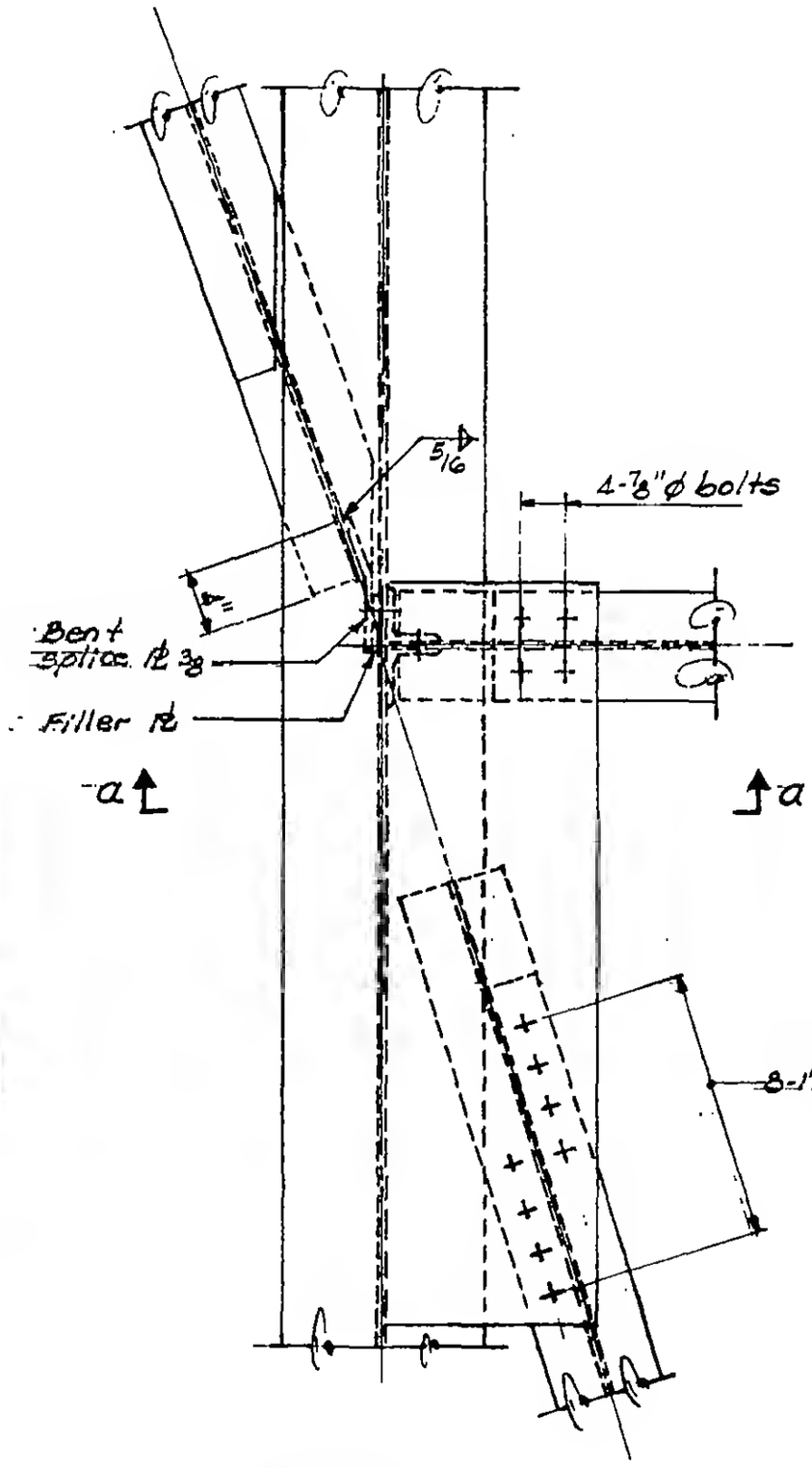

PLAN

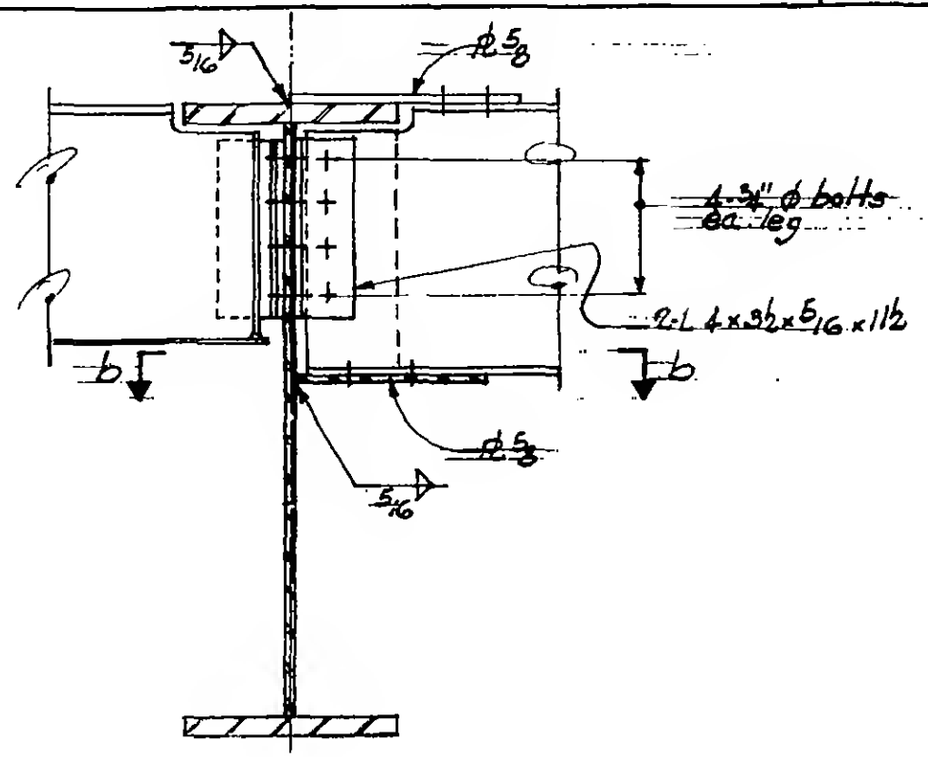

Section a-a

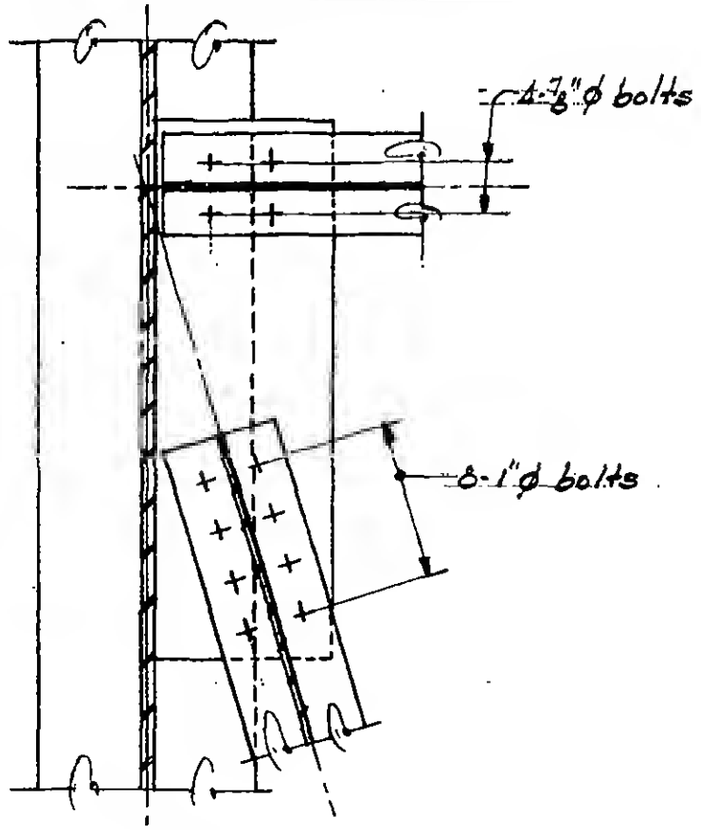

Section b-b

G-485-62

LICENSED PROFESSIONAL ENG'R
LESLIE E. ROBERTSON
No. 34360
UNIVERSITY OF THE STATE OF NEW YORK