SKILLING - HELLE - CHRISTIANSEN - ROBERTSON Structural & Civil Engineers

PROJECT THE WORLD TRADE CENTER | TITLE CONNECTION DETAIL 867A | DATE 9-15-67

REVISIONS

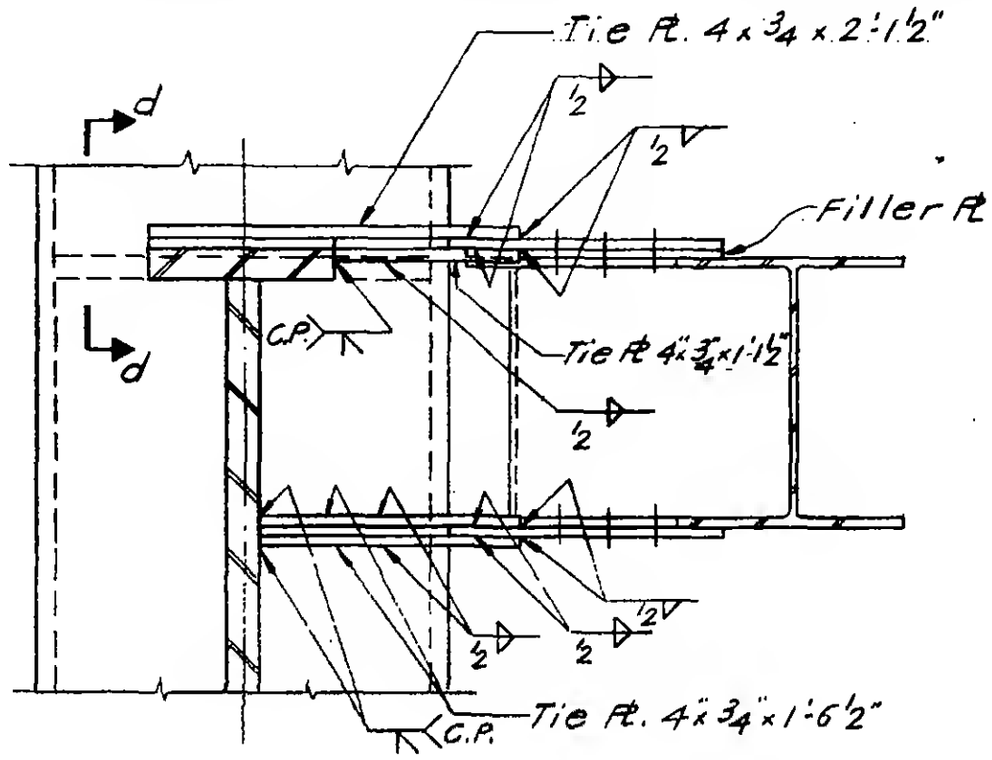

Section c-c

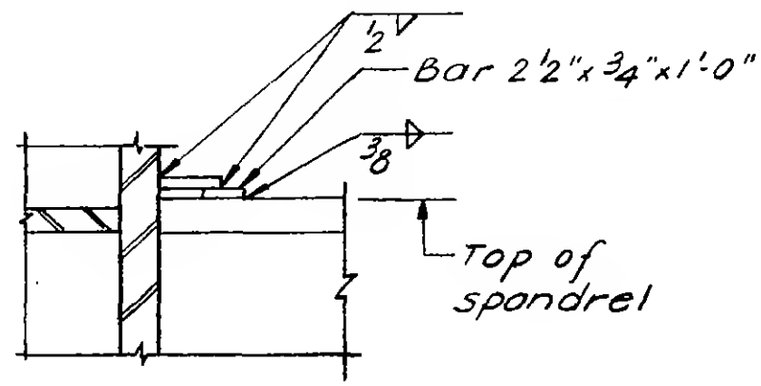

Section d-d

LESLIE E. ROBERTSON
No. 34360
LICENSED PROFESSIONAL ENGINEER
UNIVERSITY OF THE STATE OF NEW YORK

6-AB5-65.1