WORTHINGTON, SKILLING, HELLE & JACKSON Civil & Structural Engineers

PROJECT	TITLE	DATE
THE WORLD TRADE CENTER	CONNECTION DETAIL 869 A	7-14-67

REVISIONS

9-29-67

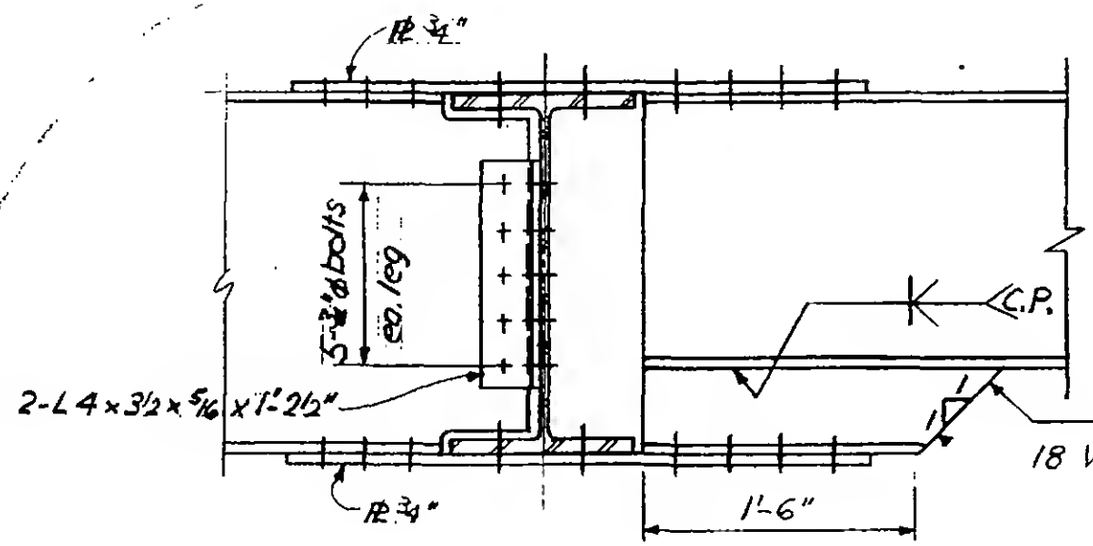

Section a-a

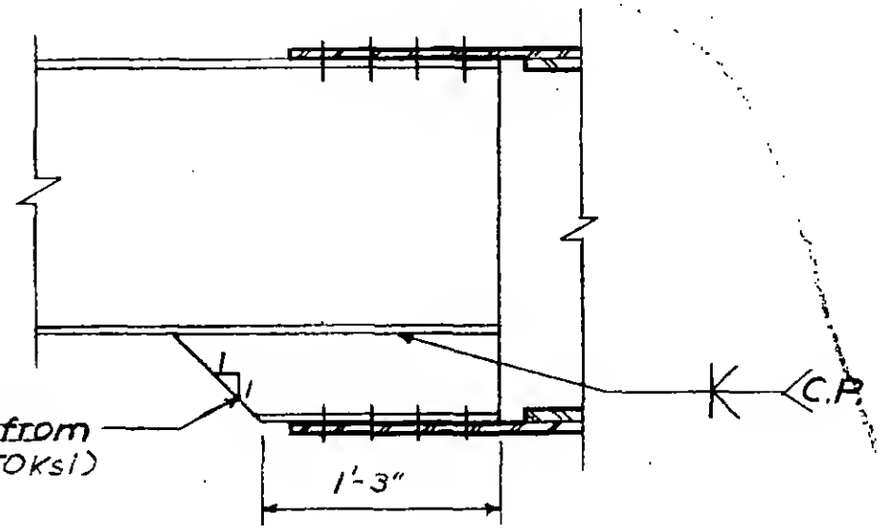

Section b-b

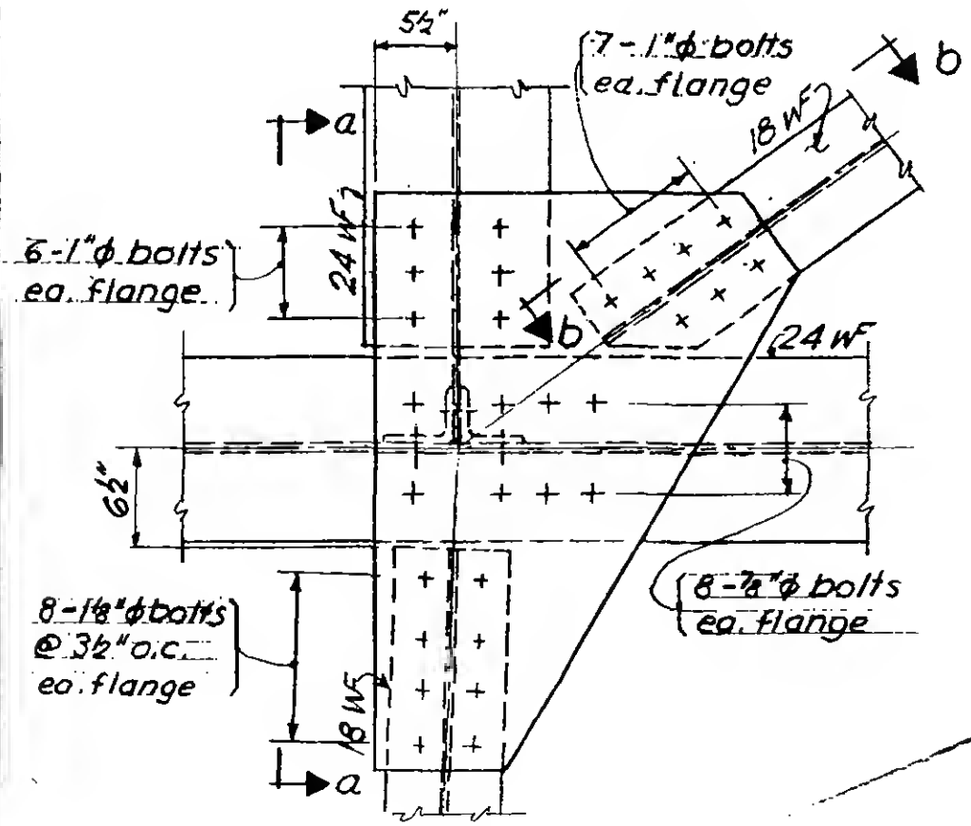

Plan

LICENSED PROFESSIONAL ENGINEER
LESLIE E. ROBERTSON
No. 34360
LICENSED BY THE STATE OF NEW YORK

6-AB5-67