WORTHINGTON, SKILLING, HELLE & JACKSON — Civil & Structural Engineers

PROJECT THE WORLD TRADE CENTER | TITLE CONNECTION DETAIL 870A | DATE 7-14-67

REVISIONS

9-15-67

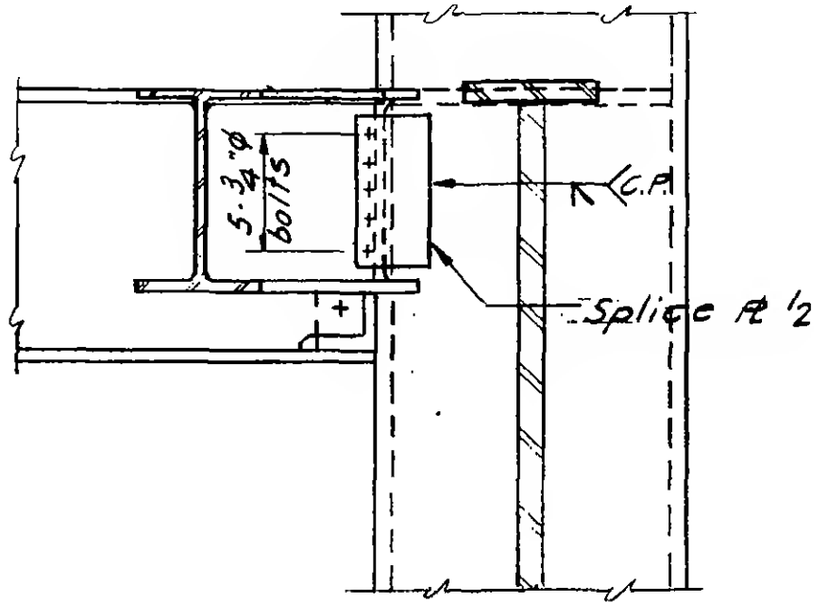


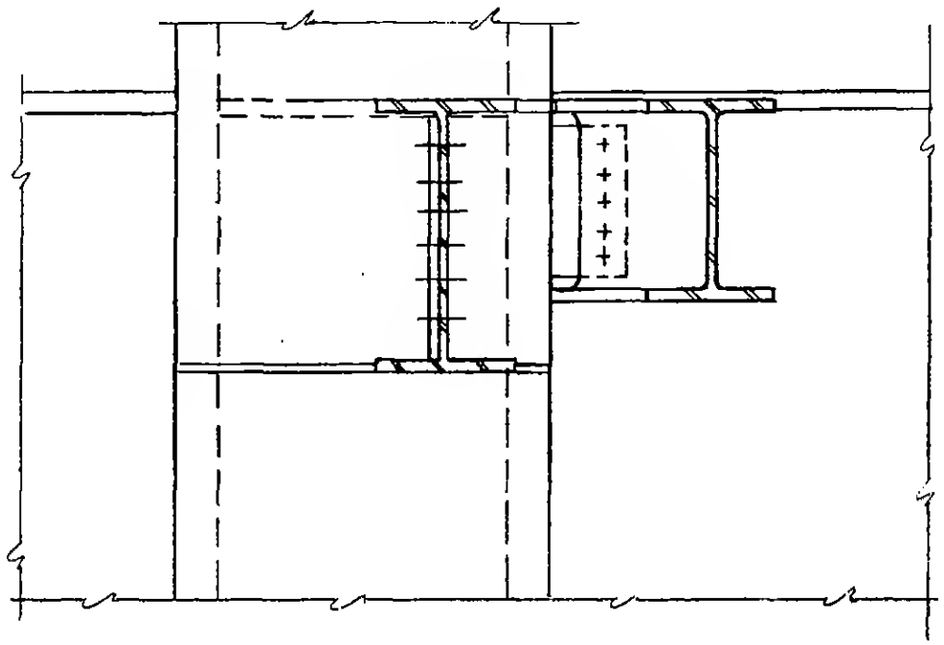

Section a-a

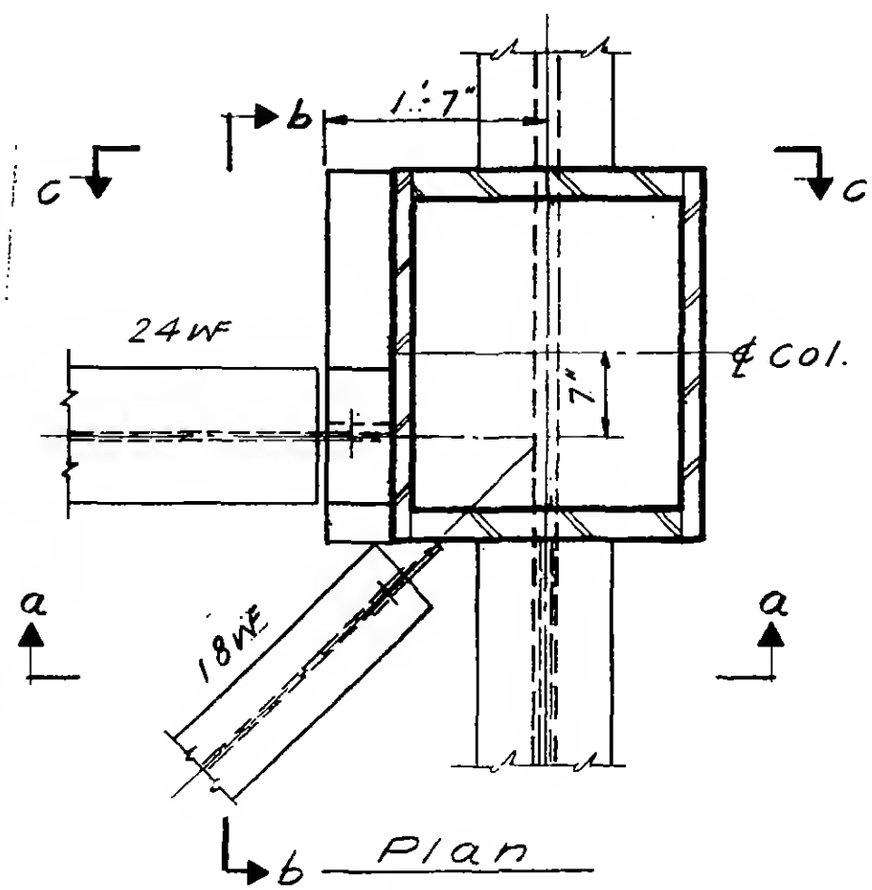


Plan

Section b-b

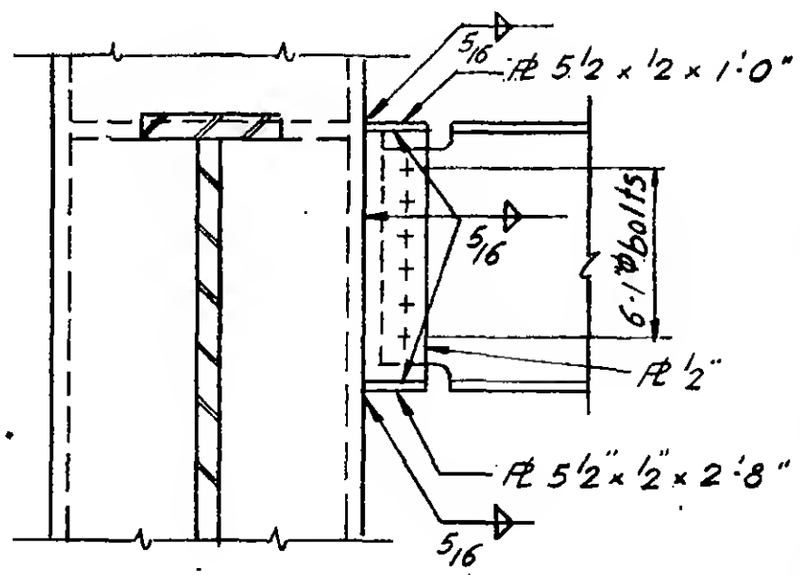


Section c-c

LICENSED PROFESSIONAL ENGINEER
LESLIE E. ROBERTSON
No. 34360
THE STATE OF NEW YORK
UNIVERSITY

6-AR5-69