WORTHINGTON, SKILLING, HELLE & JACKSON Civil & Structural Engineers

PROJECT THE WORLD TRADE CENTER | TITLE CONNECTION DETAIL 874 A | DATE 7-14-67

REVISIONS

9-29-67

10-4-67

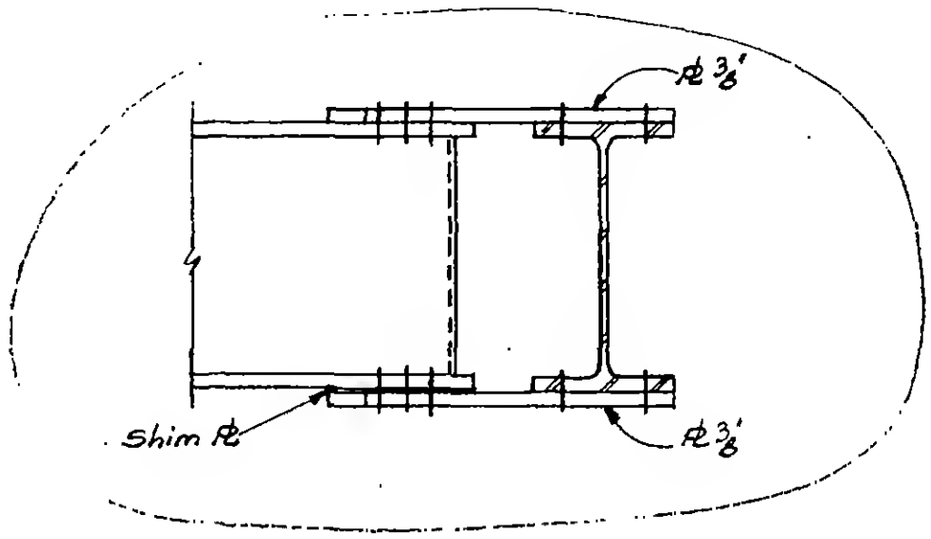

Section a-a

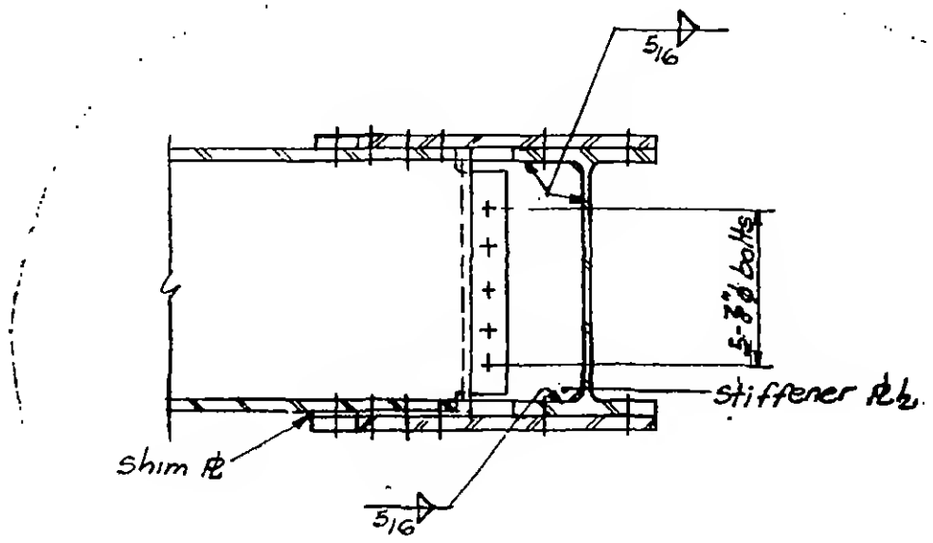

Section b-b

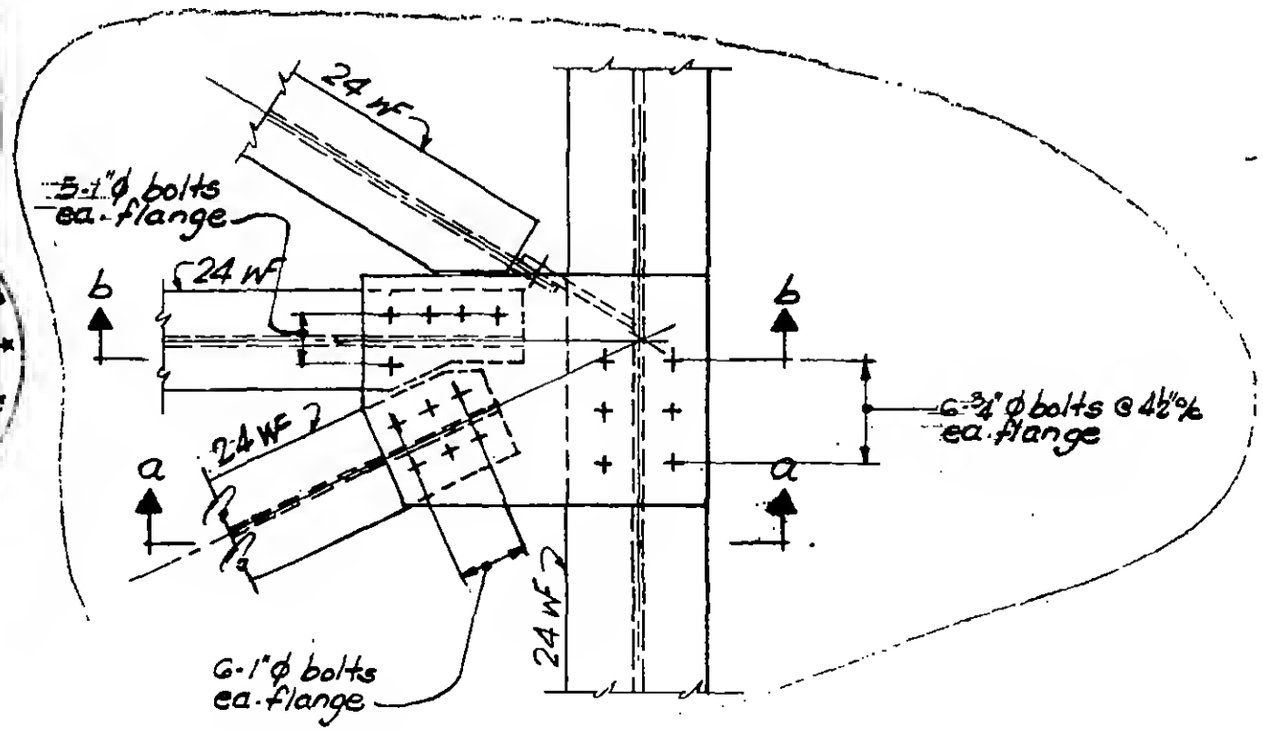

Plan

LICENSED PROFESSIONAL ENGINEER
LESLIE E. ROBERTSON
UNIVERSITY OF THE

6-AB5-72